RC10 B6.3 TEAM KIT

Driver:	Sylvain Gallo-Selva	Event:	FRENCH NATIONALS ROUND 1
Date:	2022/03/13	Track:	Reims Indoor Dirt
Qualify: 6	TQ: ☐ Main: A	Finish: 3	Best Lap Time:

Front Suspension:

Reset Forms

Ride Height:	22,5mm
Camber:	1°
Toe:	-0,5°
Anti-Roll Bar:	/
Arm Type:	Kit
Tower Type:	Stock
Wheel Hex:	Stock
Steering Block:	4 mm
Caster Block Insert:	2,5°
Bulkhead Type:	Aluminium #91658
Kick-Up Angle:	25°
Notes:	Aluminium Steering Bellcranks and Steering Rack #91668 / #91669

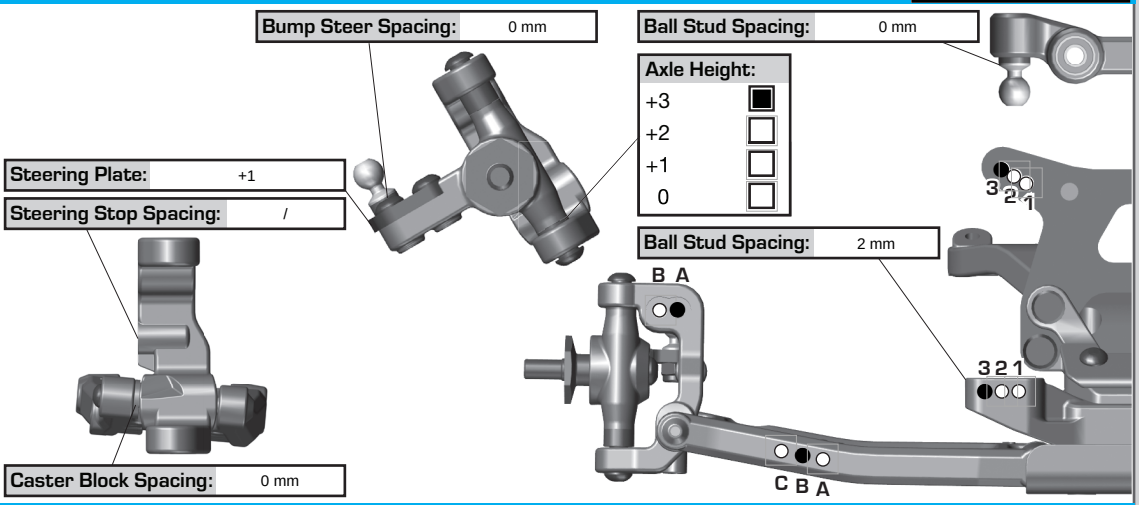

Rear Suspension:

Ride Height:	23mm
Camber:	1°
Anti-Roll Bar:	/
Arm Type:	B6.1 Type
Tower Type:	Stock
Arm Spacing:	4 mm behind arms
Wheel Hex:	5 mm
Shock Mounting Position:	Front of Arm ■ Rear of Arm ☐
Hub Spacing:	Fwd ☐ Mid ■ Back ☐
CVA Bone Length:	Stock
CVA Axle Type:	Stock
Notes:	-2 mm from front of arms

C Mount: Aluminum ☐ Brass ■

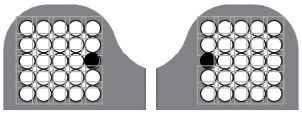

D Mount: Aluminum ■ Brass ☐

Axle Height:

▼0	3▲	+3
▼1	2▲	+2
▲1	2▼	+1
▲0	3▼	+0

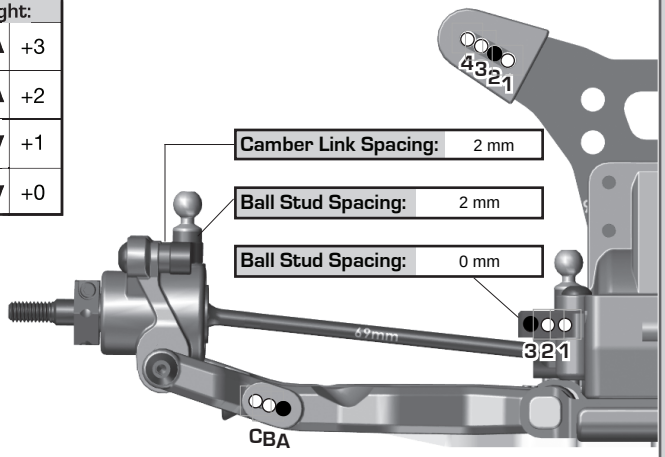

Electronics:

Radio:	Sanwa M17	Servo:	#27118 Reedy RS3005A
EPA:	Throttle: 100 %	Brake:	42 %
ESC:	#27004 Reedy 510R		
ESC Settings:			
Motor:	#27441 Reedy Sonic 540-M4 Motor 7.5T		
Wind:	7.5T	Timing:	0 deg
Pinion:	21	Spur:	78
Battery:			
Battery Position:	F3		
Battery Weight:			

Drivetrain:

Transmission: Laydown: ☐ Layback: ■

Differential: Ball Diff: ■

Height: 0 Gear Diff: ☐

Gear Diff Mass:

Notes:

Slipper Clutch:

Type:	Vented #91802 + #91806
# of Pads:	2
Setting:	

Shocks:

	Front	Rear
Piston:	2x1.6 #91621	2x1.7 #91622
Fluid:	35 #5474	35 #5474
Spring:	White V1	Black V1
Limiters:	Int: 0 mm Ext: 0 mm	Int: 0 mm Ext: 1 mm
Stroke:	21 mm	29.5 mm
Eyelet Length:	Short	Long
Cup Offset:	5 mm	5 mm
Notes:	FOX Kashima #91576 (front) & #91577 (rear)	

Track Info:

Size:	Small ☐	Medium ☐	Large ■	Extra Large ☐
Surface:	Dirt ■	Carpet ☐	Astroturf ☐	Multi Surface ☐
Traction:	Low ■	Medium ☐	High ☐	Very High ☐
Moisture:	Dry ■	Damp ☐	Wet ☐	
Condition:	Indoor ■	Outdoor ☐	Dusty ☐	Hard Packed ☐
	Bumpy ■	Grooved ☐	Smooth ☐	Loamy ☐
Temperature:	Ambient: 12 deg	Track:		
Notes:				

Tires:

Front Tires:	JConcepts Rips
Front Compound:	Green
Front Insert:	Std
Rear Tires:	HotRace Bangkok
Rear Compound:	Soft & Super Soft
Rear Insert:	JConcepts Dirt Tech (Gray)
Wheel (F/R):	AS9690 / AS9695
Notes:	

Body, Weight:

Body:	Jconcepts F2 Light
Front Wing:	/
Rear Wing:	JC Aero S-Type 7" + Aero S-Type Center Divider
Wing Angle:	6 deg
Chassis Length:	Stock
Servo Weights:	Carbon
Electronic Weights:	Carbon
Total Vehicle Weight:	1570 g

Vehicle Comments: