RC10 B6.3 TEAM KIT

| | | | |
|---|---|---|---|
| **Driver:** | Roger Mills | **Event:** | Csrpet Kings 2021 Round 1 |
| **Date:** | 17/10/2021 | **Track:** | Torbay |
| **Qualify:** | 3rd | **TQ:** ☐ **Main:** A | **Finish:** 3rd **Best Lap Time:** 17.043 |

## Front Suspension:

Reset Forms

| | |
|---|---|
| Ride Height: | 14mm |
| Camber: | -1° |
| Toe: | 1° out per side |
| Anti-Roll Bar: | None |
| Arm Type: | Carbon (AS91827) |
| Tower Type: | Kit gullwing (AS91880) |
| Wheel Hex: | Kit |
| Steering Block: | 3mm trail |
| Caster Block Insert: | 5° |
| Bulkhead Type: | Steel - modified (AS91898) |
| Kick-Up Angle: | 25° |
| Notes: | Carbon bulkhead set (AS91875)<br>1mm machined of chassis contact face of bulkhead |

Bump Steer Spacing: 0

Ball Stud Spacing: 0

Axle Height:
- +3 ■
- +2 ☐
- +1 ☐
- 0 ☐

Steering Plate: Kit +1

Steering Stop Spacing: None

Ball Stud Spacing: 0

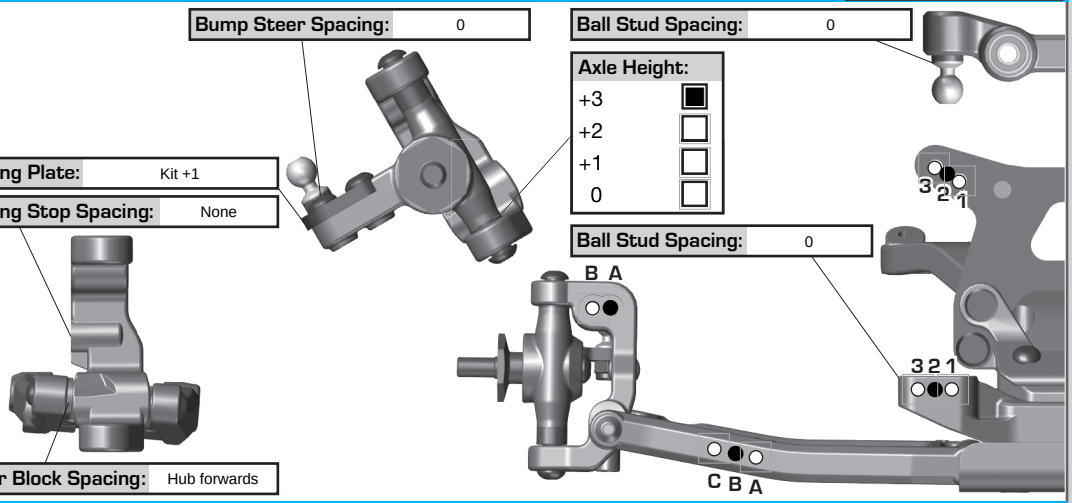


Caster Block Spacing: Hub forwards

## Rear Suspension:

| | |
|---|---|
| Ride Height: | 14mm |
| Camber: | -1° |
| Anti-Roll Bar: | Blue 1.4mm |
| Arm Type: | Carbon 73mm (AS91873) |
| Tower Type: | Kit (AS91881) |
| Arm Spacing: | Arms forward |
| Wheel Hex: | 5mm |
| Shock Mounting Position: | Front of Arm ■ Rear of Arm ☐ |
| Hub Spacing: | Fwd ■ Mid ☐ Back ☐ |
| CVA Bone Length: | 69mm (AS91860) |
| CVA Axle Type: | Kit +2 (AS91859) |
| Notes: | |

C Mount: Aluminum ■ Brass ☐

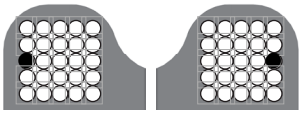

D Mount: Aluminum ■ Brass ☐

| Axle Height: | | | |
|---|---|---|---|
| | ▼0 | 3▲ | +3 |
| | ▼1 | 2▲ | +2 |
| | ▲1 | 2▼ | +1 |
| | ▲0 | 3▼ | +0 |

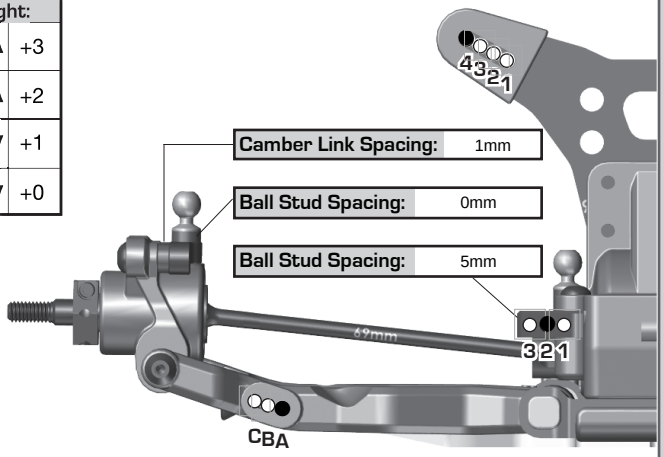


Camber Link Spacing: 1mm

Ball Stud Spacing: 0mm

Ball Stud Spacing: 5mm

## Electronics:

| | | | |
|---|---|---|---|
| Radio: | Futaba 7XC | Servo: | ETRONIX 2061 |
| EPA: | Throttle: 100 % | Brake: | 100 % |
| ESC: | HobbyWing XR10pro G2 | | |
| ESC Settings: | Turbo 30deg / brake150% / Trottle rate 10 | | |
| Motor: | HobbyWing V10 G3 | | |
| Wind: | 6.5T | Timing: | 30° |
| Pinion: | 22 | Spur: | 78 |
| Battery: | CENTRO 3200mAh | | |
| Battery Position: | 7mm forward of most kit forward position | | |
| Battery Weight: | 39g under lipo | | |

## Drivetrain:

Transmission: Laydown: ■ Layback: ☐

Differential: Ball Diff: ☐

Height: +3 Gear Diff: ■

Gear Diff Mass: 60k / 2 gears

Notes: Could have done with 40k / 2 gear

## Slipper Clutch:

| | |
|---|---|
| Type: | Kit B6.3 carpet (spring AS91891) |
| # of Pads: | 2 x 1mm AS(92285) |
| Setting: | Just lift nose |

## Shocks:

| | Front | Rear |
|---|---|---|
| Piston: | 2x1.6 2mm (AS91896) | 2x1.7 2mm (AS91897) |
| Fluid: | 45wt | 35wt |
| Spring: | Orange V2 | Blue V2 |
| Limiters: | Int: 0 Ext: 0 | Int: 0 Ext: 0 |
| Stroke: | 21.5mm | 27.5mm |
| Eyelet Length: | Short | Long |
| Cup Offset: | 5mm | 0mm |
| Notes: | Would try 2x1.5 / 40wt with 2x1.6 / 30wt | |

## Track Info:

| | | | | |
|---|---|---|---|---|
| Size: | Small ■ | Medium ☐ | Large ☐ | Extra Large ☐ |
| Surface: | Dirt ■ | Carpet ☐ | Astroturf ☐ | Multi Surface ☐ |
| Traction: | Low ☐ | Medium ■ | High ■ | Very High ☐ |
| Moisture: | Dry ■ | Damp ☐ | Wet ☐ | |
| Condition: | Indoor ■ | Outdoor ☐ | Dusty ☐ | Hard Packed ☐ |
| | Bumpy ☐ | Grooved ☐ | Smooth ☐ | Loamy ☐ |
| Temperature: | Ambient: 20°C | Track: | | |
| Notes: | | | | |

## Tires:

| | |
|---|---|
| Front Tires: | Schumacher LP cut staggers |
| Front Compound: | Yellow |
| Front Insert: | None |
| Rear Tires: | Schumacher Cactus |
| Rear Compound: | Yellow |
| Rear Insert: | Rudebits 'cheater' |
| Wheel (F/R): | AE |
| Notes: | Inner & outer feather edges trimmed off Cactus |

## Body, Weight:

| | |
|---|---|
| Body: | Penguin Dart super light |
| Front Wing: | AE kit |
| Rear Wing: | Penguin B6 / B64 |
| Wing Angle: | 4° |
| Chassis Length: | LONG |
| Servo Weights: | Steel (AS91747) |
| Electronic Weights: | 2 x Steel (2 x AS91748) |
| Total Vehicle Weight: | 1550g |

Vehicle Comments: Easy to drive & naturally fast. Note doubled up ESC weight (drill out screw holes in lowest one to Ø3.2mm), more forward lipo position & especially the machined steel front bulkhead

:: For more setups, visit RC10.com and click on "Setup Sheets"