RC10 B6.3 TEAM KIT

Driver:	Kouki Kato	Event:	Race
Date:	14/11/2021	Track:	ChampStadium
Qualify:		TQ: ■ Main: A	Finish: 2 Best Lap Time: 16.741

Reset Forms

Front Suspension:

Ride Height:	22mm
Camber:	1.0°
Toe:	0.5°
Anti-Roll Bar:	
Arm Type:	Carbon
Tower Type:	Normal
Wheel Hex:	5.0mm
Steering Block:	Normal
Caster Block Insert:	Normal
Bulkhead Type:	Aluminum
Kick-Up Angle:	25°
Notes:	All Titanium Turnbuckle Set All Heavy-duty Titanium Ballstuds

Bump Steer Spacing: 0mm

Steering Plate: Normal

Steering Stop Spacing: 0mm

Caster Block Spacing: 1mm

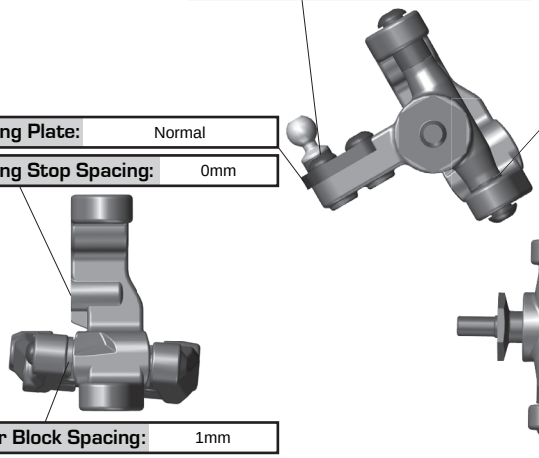

Ball Stud Spacing: 0mm

Axle Height:

+3	☐
+2	■
+1	☐
0	☐

Ball Stud Spacing: 1mm

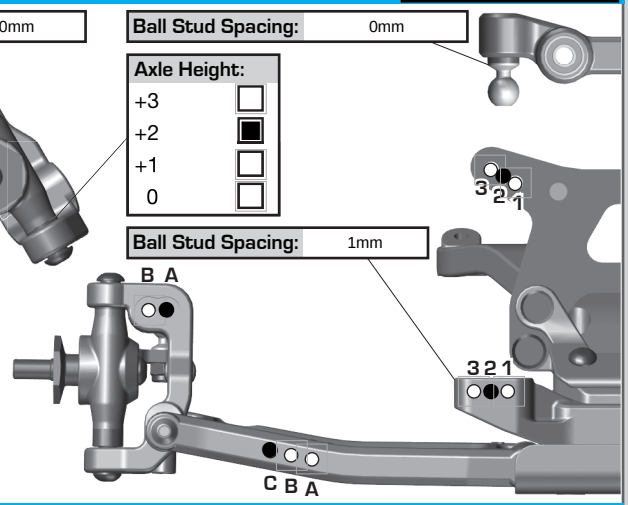

Rear Suspension:

Ride Height:	21mm
Camber:	2.5°
Anti-Roll Bar:	
Arm Type:	Normal 73mm
Tower Type:	Normal
Arm Spacing:	Arm forward
Wheel Hex:	5.0mm
Shock Mounting Position:	Front of Arm ■ Rear of Arm ☐
Hub Spacing:	Fwd ☐ Mid ■ Back ☐
CVA Bone Length:	69mm
CVA Axle Type:	+2mm
Notes:	All Titanium Turnbuckle Set All Heavy-duty Titanium Ballstuds

C Mount: Aluminum ☐ Brass ■

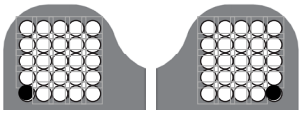

D Mount: Aluminum ■ Brass ☐

Axle Height:

	▼0	3▲	+3
	▼1	2▲	+2
●	▲1	2▼	+1
	▲0	3▼	+0

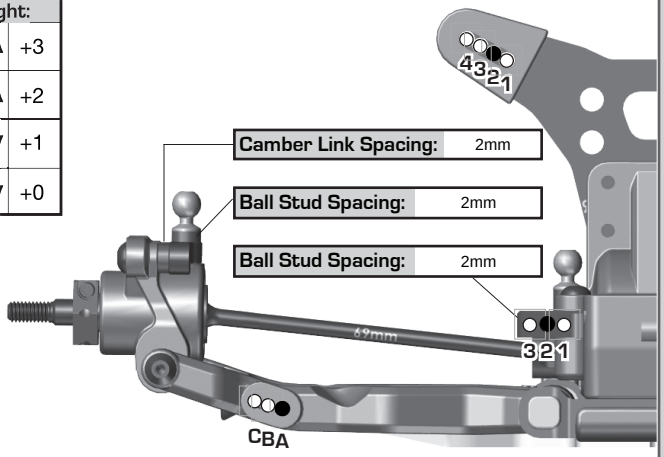

Camber Link Spacing: 2mm

Ball Stud Spacing: 2mm

Ball Stud Spacing: 2mm

Electronics:

Radio:	M17	Servo:	PGS-LH II
EPA:	Throttle: 100 %	Brake: 96 %	
ESC:	ORCA OE1		
ESC Settings:			
Motor:	ORCA MODTREME		
Wind:	7.5T	Timing:	20
Pinion:	22T	Spur:	78T
Battery:	ORCA INFINITE X 4500mAh		
Battery Position:	5F		
Battery Weight:			

Drivetrain:

Transmission: Laydown: ■ Layback: ☐

Differential: Ball Diff: ■

Height: +1 Gear Diff: ☐

Gear Diff Mass:

Notes:

Slipper Clutch:

Type:	
# of Pads:	
Setting:	

Shocks:

	Front	Rear
Piston:	2×1.6	2×1.7
Fluid:	AXON 35wt	AXON 32.5wt
Spring:	V2 Blue	V2 Blue
Limiters:	Int: 0 Ext: 0	Int: 0 Ext: 0
Stroke:	22.5mm	28.5mm
Eyelet Length:	Long	Long
Cup Offset:	5mm	5mm
Notes:		

Track Info:

Size:	Small ☐	Medium ■	Large ☐	Extra Large ☐
Surface:	Dirt ■	Carpet ☐	Astroturf ☐	Multi Surface ☐
Traction:	Low ☐	Medium ■	High ☐	Very High ☐
Moisture:	Dry ■	Damp ☐	Wet ☐	
Condition:	Indoor ■	Outdoor ☐	Dusty ☐	Hard Packed ☐
	Bumpy ☐	Grooved ☐	Smooth ☐	Loamy ☐
Temperature:	Ambient:	Track:		
Notes:				

Tires:

Front Tires:	Dirt Webs
Front Compound:	Silver
Front Insert:	Dirt Webs Normal
Rear Tires:	Ellipse
Rear Compound:	Silver
Rear Insert:	Ellipse Normal
Wheel (F/R):	Tworks Yellow
Notes:	

Body, Weight:

Body:	Jconcepts P2 Regular Weight
Front Wing:	Jconcepts B6.3 Front Wing
Rear Wing:	Carpet I Astro High-Clearance 6.5"
Wing Angle:	3°
Chassis Length:	Normal
Servo Weights:	Carbon
Electronic Weights:	Carbon
Total Vehicle Weight:	1544g

Vehicle Comments: All SQUARE Titanium Screw,Tworks Wheel Nut

:: For more setups, visit RC10.com and click on "Setup Sheets"