RC10 B6.3 TEAM KIT

Driver:	Yoshio Ohtsuka	Event:	
Date:	2021/11/08	Track:	OCK KANUMA
Qualify:	TQ: ☐ Main:	Finish:	Best Lap Time:

Front Suspension:

Reset Forms

Ride Height:	15mm
Camber:	-1°
Toe:	少しトーアウト
Anti-Roll Bar:	1.1mm
Arm Type:	#91872 gull wing, Carbon
Tower Type:	#91880 B6.3 gull wing
Wheel Hex:	#91683, Titanium
Steering Block:	4mm
Caster Block Insert:	5mm
Bulkhead Type:	#91898 steel
Kick-Up Angle:	25°
Notes:	#91668 Aluminum Steering Bellcranks

Bump Steer Spacing: 0 mm

Ball Stud Spacing: 0mm

Axle Height:
+3 ■
+2 ☐
+1 ☐
0 ☐

Steering Plate: #91680 +1

Steering Stop Spacing: 0mm

Ball Stud Spacing: 1mm

Caster Block Spacing: 1mm

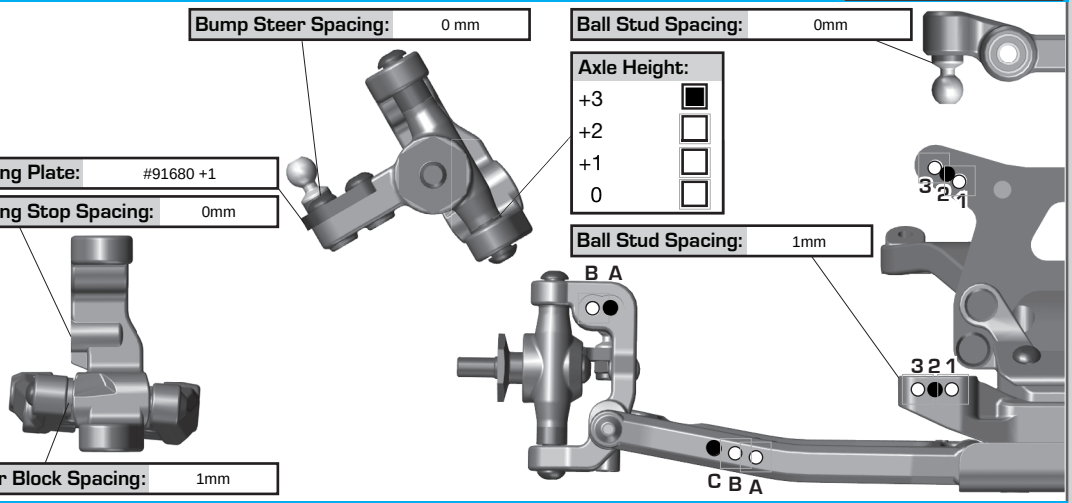

Rear Suspension:

Ride Height:	15mm
Camber:	-1°
Anti-Roll Bar:	1.3mm
Arm Type:	#91873 73mm, carbon
Tower Type:	#91881 ノーマル
Arm Spacing:	前側
Wheel Hex:	#91610 7.0mm Hex + 1mmスペーサー
Shock Mounting Position:	Front of Arm ■ Rear of Arm ☐
Hub Spacing:	Fwd ☐ Mid ■ Back ☐
CVA Bone Length:	キット標準
CVA Axle Type:	キット標準
Notes:	

C Mount: Aluminum ■ Brass ☐

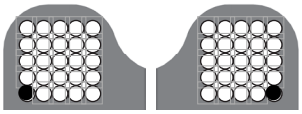

D Mount: Aluminum ■ Brass ☐

Axle Height:

●	▼0	3▲	+3
○	▼1	2▲	+2
○	▲1	2▼	+1
○	▲0	3▼	+0

Camber Link Spacing: 1mm

Ball Stud Spacing: 1mm

Ball Stud Spacing: 3mm

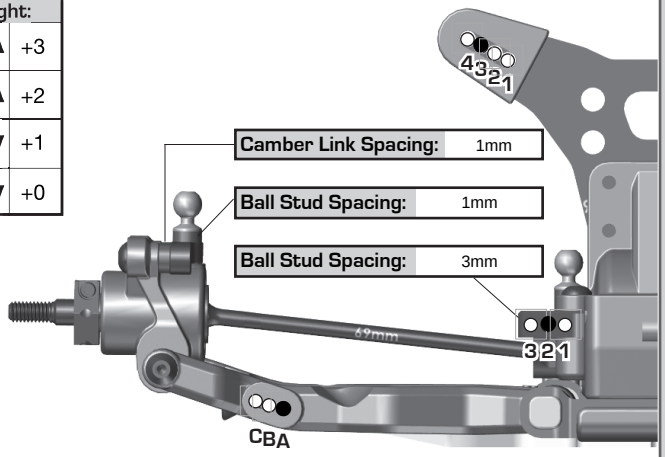

Electronics:

Radio:	FUTABA T10PX	Servo:	HPS-CT700
EPA:	Throttle: 140 %	Brake:	125 %
ESC:	YOKOMO PRO4		
ESC Settings:	ノーマル		
Motor:	#27442 REEDY M4 7T		
Wind:		Timing:	
Pinion:	22	Spur:	78
Battery:	#27365 Zappers SG4 4100mAh		
Battery Position:	1番前		
Battery Weight:	20g		

Drivetrain:

Transmission:
Laydown: ■ Layback: ☐

Differential: Ball Diff: ☐
Height: +3 Gear Diff: ■
Gear Diff Mass: 2ギヤ #5454 AE7000

Notes:

Slipper Clutch:

Type:	ノーマル
# of Pads:	ノーマル
Setting:	緩め

Shocks:

	Front	Rear
Piston:	1.6x2	1.7x2穴 +1.0mm穴開け加工
Fluid:	AE37.5	AE35
Spring:	#91835 V2 レッド	#91840 V2 ブルー
Limiters:	Int: 0 Ext: 0	Int: 0 Ext: 0
Stroke:	23mm	28mm
Eyelet Length:	EXロング	EXロング
Cup Offset:	5mm	0mm
Notes:		

Track Info:

Size:	Small ■	Medium ☐	Large ☐	Extra Large ☐
Surface:	Dirt ■	Carpet ☐	Astroturf ☐	Multi Surface ☐
Traction:	Low ☐	Medium ☐	High ■	Very High ■
Moisture:	Dry ■	Damp ☐	Wet ☐	
Condition:	Indoor ☐	Outdoor ■	Dusty ☐	Hard Packed ☐
	Bumpy ■	Grooved ☐	Smooth ☐	Loamy ☐
Temperature:	Ambient:	Track:		
Notes:				

Tires:

Front Tires:	Schumacher U6855 カクタスフュージョン4WD用Fタイヤ
Front Compound:	タイヤ接着面両サイド一段カット
Front Insert:	無し
Rear Tires:	Schumacher U6838 カクタスタイヤ
Rear Compound:	Schumacher U6838 カクタス/内外ピンカット
Rear Insert:	Schumacher U3734 ミディアム
Wheel (F/R):	JConcepts
Notes:	

Body, Weight:

Body:	JConcepts #0341L S2
Front Wing:	ダンパステー上部
Rear Wing:	JConcepts #0197 6.5inc リップ全カット
Wing Angle:	TEAM AJ #3D-AB6WM + 6°スペーサー(近日発売予定)
Chassis Length:	#91893 B6.3 +3mmノーマル
Servo Weights:	#91747 Steel
Electronic Weights:	#91748 Steel
Total Vehicle Weight:	1530 g

Vehicle Comments: