RC10 B6.3 TEAM KIT

Driver:	なおじゅん	Event:	
Date:	2021/12/06	Track:	RC Maniax ARENA
Qualify:		TQ: ☐ Main:	Finish: Best Lap Time:

Front Suspension:

Reset Forms

Ride Height:	16mm
Camber:	-2°
Toe:	-1°
Anti-Roll Bar:	0.8mm
Arm Type:	#91872 gull wing, Carbon
Tower Type:	#91880 B6.3 gull wing
Wheel Hex:	#91683, Titanium
Steering Block:	4mm
Caster Block Insert:	2.5up 27.5°
Bulkhead Type:	#91898 steel
Kick-Up Angle:	25°
Notes:	

Bump Steer Spacing: 0 mm

Ball Stud Spacing: 1mm

Axle Height:
- +3 ☐
- +2 ■
- +1 ☐
- 0 ☐

Steering Plate: #91680 +1

Steering Stop Spacing: 0mm

Ball Stud Spacing: 1mm

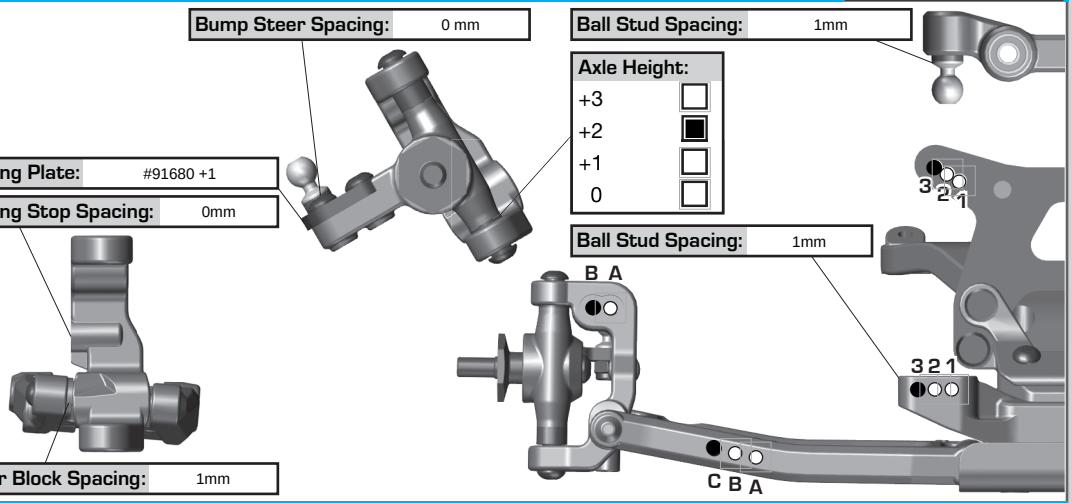

Caster Block Spacing: 1mm

Rear Suspension:

Ride Height:	16mm
Camber:	-2°
Anti-Roll Bar:	1.3mm
Arm Type:	#91874 75mm, carbon
Tower Type:	#91881 ノーマル
Arm Spacing:	一番後ろ
Wheel Hex:	#91609 5.0mm Hex
Shock Mounting Position:	Front of Arm ☐ Rear of Arm ☐
Hub Spacing:	Fwd ☐ Mid ☐ Back ■
CVA Bone Length:	#91860 69mmボーン
CVA Axle Type:	#91859 +2mmアクスル
Notes:	

C Mount: Aluminum ■ Brass ☐

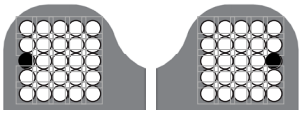

D Mount: Aluminum ■ Brass ☐

Axle Height:

●	▼0	3▲	+3
○	▼1	2▲	+2
○	▲1	2▼	+1
○	▲0	3▼	+0

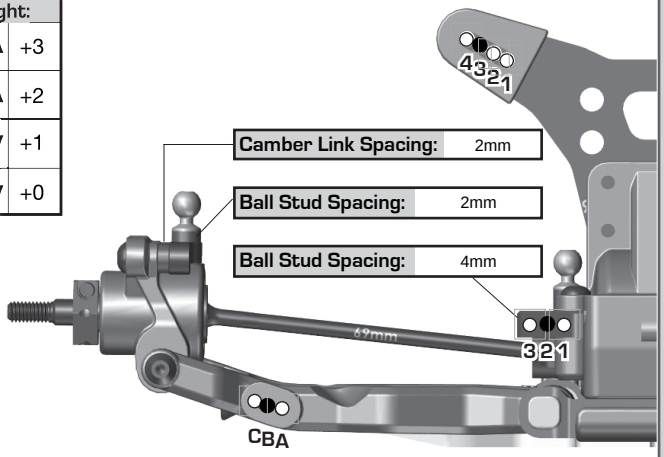

Camber Link Spacing: 2mm

Ball Stud Spacing: 2mm

Ball Stud Spacing: 4mm

Electronics:

Radio:	SANWA M17	Servo:	SANWA LH2
EPA:	Throttle: 116 %	Brake:	80 %
ESC:	TRION TRICO PRO V2 #TR-TCPK2		
ESC Settings:	ノンブースト		
Motor:	TRION TricoRoll Brushless V 2 17.5T(14mm チタンローター)		
Wind:		Timing:	
Pinion:	41T	Spur:	YOKOMO 69T
Battery:	TRION 4550mAh/7.6V/ LCG Shorty #TGB-SLCG4550HVR		
Battery Position:	5F		
Battery Weight:	#27355 REEDY 50g		

Drivetrain:

Transmission: Laydown: ■ Layback: ☐

Differential: Ball Diff: ☐

Height: +3 Gear Diff: ■

Gear Diff Mass: AXON 12500cst

Notes:

Slipper Clutch:

Type:	#91800 ダイレクトドライブ
# of Pads:	
Setting:	

Shocks:

	Front	Rear
Piston:	1.6 x2	1.7 x2
Fluid:	AE #40	AE #30
Spring:	#91834 V2 イエロー	#91840 V2 ブルー
Limiters:	Int: 00 Ext:	Int: 0 Ext: 0
Stroke:	24mm	28.5mm
Eyelet Length:	+0	+4
Cup Offset:	5mm	0mm

Notes:

Track Info:

Size:	Small ☐	Medium ■	Large ☐	Extra Large ☐
Surface:	Dirt ☐	Carpet ■	Astroturf ☐	Multi Surface ☐
Traction:	Low ☐	Medium ☐	High ■	Very High ☐
Moisture:	Dry ■	Damp ☐	Wet ☐	
Condition:	Indoor ■	Outdoor ☐	Dusty ☐	Hard Packed ☐
	Bumpy ■	Grooved ☐	Smooth ☐	Loamy ☐
Temperature:	Ambient:	Track: 寒い		
Notes:				

Tires:

Front Tires:	TAMIYA デュアルブロックタイヤK(OP-1185)
Front Compound:	
Front Insert:	TAMIYA (AO-5048)リヤ用を幅を詰めずに使用
Rear Tires:	TAMIYA 後輪デュアルブロックタイヤK(OP-1186)
Rear Compound:	
Rear Insert:	タイヤ付属のインナー
Wheel (F/R):	AE(9690 / 9695)
Notes:	マニアリグリッパー1（ブルー / RCMX-104）

Body, Weight:

Body:	JConcepts #0341L S2
Front Wing:	JConcepts #0500
Rear Wing:	JConcepts #0197 6.5inc
Wing Angle:	TEAM AJ #3D-AB6WM + 6°スペーサー(近日発売予定)
Chassis Length:	#91893 B6.3 +3mmノーマル
Servo Weights:	#91747 Steel
Electronic Weights:	#91747 Steel
Total Vehicle Weight:	

Vehicle Comments: