RC10 B6.3 TEAM KIT

Driver:	Kouki Kato	Event:	Round Race
Date:	2021/07/11	Track:	TSUKUBA RC ARENA(Yatabe Arena)
Qualify:		TQ: ■ Main: A	Finish: 5 Best Lap Time: 13.3

Front Suspension:

Reset Forms

Ride Height:	14mm
Camber:	0.5
Toe:	0.5°
Anti-Roll Bar:	1mm
Arm Type:	Gull-Wing Carbon
Tower Type:	Gull-Wing
Wheel Hex:	5.0mm
Steering Block:	Normal
Caster Block Insert:	Normal
Bulkhead Type:	Normal
Kick-Up Angle:	25°
Notes:	All Titanium Turnbuckle Set All Heavy-duty Titanium Ballstuds

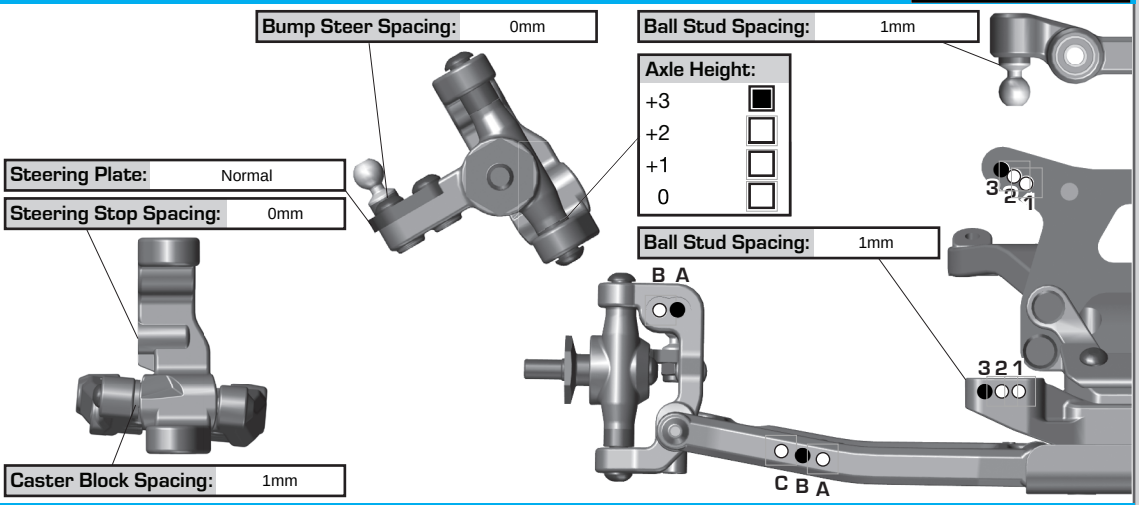

Rear Suspension:

Ride Height:	13mm
Camber:	2°
Anti-Roll Bar:	1.3mm
Arm Type:	73mm Carbon
Tower Type:	Normal
Arm Spacing:	2mm In Front Of Arm
Wheel Hex:	5.0mm
Shock Mounting Position:	Front of Arm ■ Rear of Arm □
Hub Spacing:	Fwd □ Mid □ Back ■
CVA Bone Length:	69mm
CVA Axle Type:	+2mm
Notes:	All Titanium Turnbuckle Set All Heavy-duty Titanium Ballstuds

C Mount: Aluminum ■ Brass □

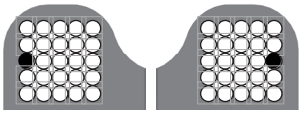

D Mount: Aluminum ■ Brass □

Axle Height:		
▼0	3▲	+3
▼1	2▲	+2
▲1	2▼	+1
▲0	3▼	+0

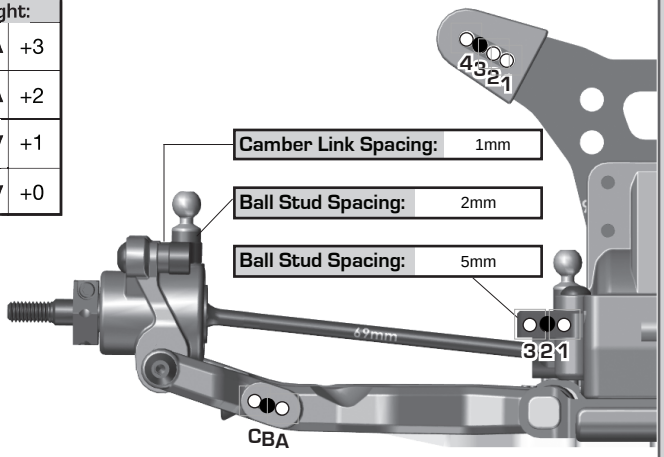

Electronics:

Radio:	M17	Servo:	PGS-LH II
EPA:	Throttle: 100 %	Brake:	100 %
ESC:	ORCA OE1		
ESC Settings:			
Motor:	ORCA MODTREME		
Wind:	6.5T	Timing:	32°
Pinion:	21T	Spur:	78T
Battery:	ORCA INFINITE X 4500mAh		
Battery Position:	5F		
Battery Weight:	70g		

Drivetrain:

Transmission: Laydown: ■ Layback: □

Differential: Ball Diff: □

Height: +3 Gear Diff: ■

Gear Diff Mass:

Notes: AXON 15k

Slipper Clutch:

Type:	
# of Pads:	
Setting:	

Shocks:

	Front	Rear
Piston:	2×1.6	2×1.7
Fluid:	AXON 40wt	AXON 35wt
Spring:	V2 Red	V2 Gray
Limiters:	Int: 0 Ext: 0	Int: 0 Ext: 1
Stroke:	24mm	28mm
Eyelet Length:	Short	Short
Cup Offset:	5mm	0mm
Notes:		

Track Info:

Size:	Small □	Medium ■	Large □	Extra Large □
Surface:	Dirt □	Carpet ■	Astroturf □	Multi Surface □
Traction:	Low □	Medium □	High ■	Very High □
Moisture:	Dry ■	Damp □	Wet □	
Condition:	Indoor ■	Outdoor □	Dusty □	Hard Packed □
	Bumpy □	Grooved □	Smooth □	Loamy □
Temperature:	Ambient:	Track:		
Notes:				

Tires:

Front Tires:	CACTUS-FUSION
Front Compound:	Yellow
Front Insert:	
Rear Tires:	CACTUS
Rear Compound:	Yellow
Rear Insert:	Normal
Wheel (F/R):	Jcocepts
Notes:	

Body, Weight:

Body:	Jconcepts S2
Front Wing:	AE Normal
Rear Wing:	CARPET I ASTRO HIGH-CLEARANCE
Wing Angle:	3°
Chassis Length:	Normal
Servo Weights:	Steel
Electronic Weights:	Steel
Total Vehicle Weight:	

Vehicle Comments: All SQUARE Titanium Screw