RC10 B5 TEAM KIT **Setup Sheet**

Driver: Patrick Hofer **Date:** 3.-4.1.2015
Track: Indoor Carpet **Event:** Winterchamps2015

Front Suspension:

Editable by Arn0 at PetitRC.com

Camber: 1 °
Total Toe: 0 °
Ride Height: 18mm
Arm Type: B5 Std.
Tower Type: B5M Std.
Caster Block Insert: 5 °
Kick-Up Angle: 30 °

Notes:

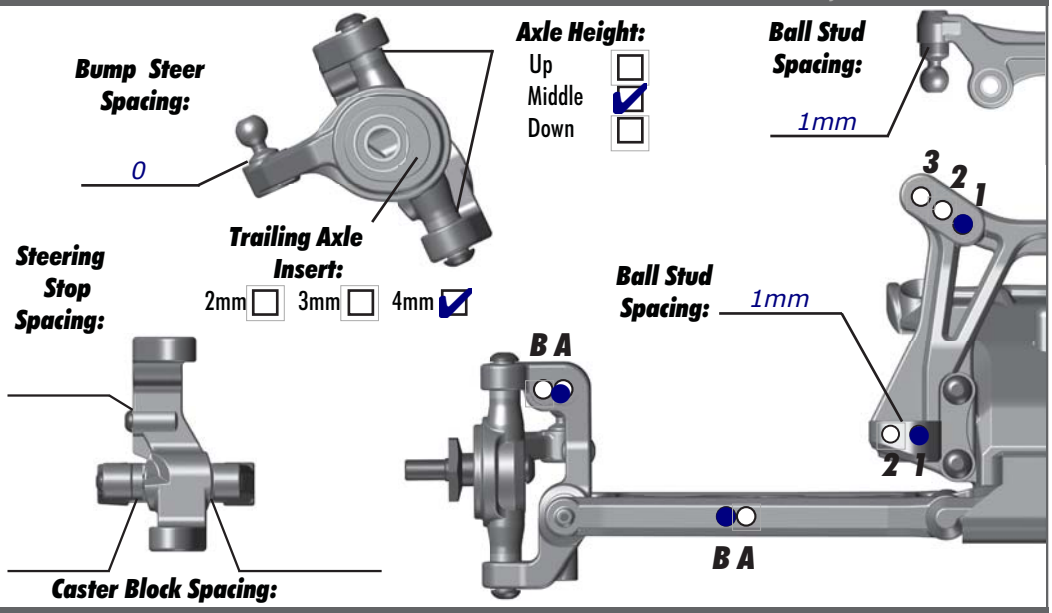

Rear Suspension:

Camber: 1.5 °
Ride Height: 19mm
Hub Spacing:
Forward ☐ Middle ☐ Back ☑

Notes:

brass Arm mount
91523/91525

Anti Roll Bar:
None ☐
Black (1.2mm) ☐
Silver (1.3mm) ☑
Gold (1.4mm) ☐

Rear Hub Link Setting:
A (C B A) B (B A)
Up ☐
Down ☐

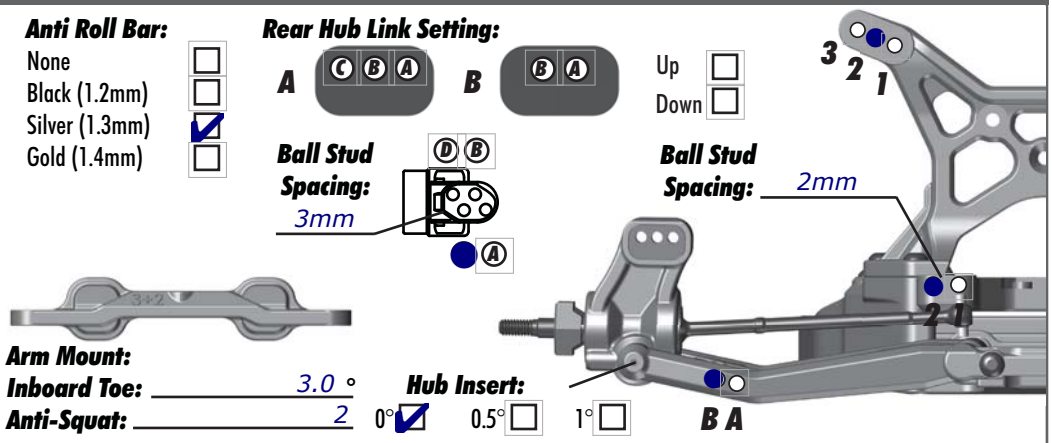

Arm Mount:
Inboard Toe: 3.0 °
Anti-Squat: 2
Hub Insert: 0° ☑ 0.5° ☐ 1° ☐

Electronics:

Radio: Sanwa M12 **Servo:** XP1015
EPA: Throttle: 100 % **Brake:** 100 %
ESC: Blackbox 410R
ESC Settings:
Motor: REEDY Sonic Mach 2
Wind: 7.0 **Timing:** 20°
Pinion: 22 **Spur:** 78
Battery: Shorty Reedy #602
Battery Position:

Drivetrain:

Differential:
Ball: ☐
Setting:
Gear: ☑
Oil: 5000

Slipper Clutch:

Type: AVID
# of Pads: 3
Notes: white/white/red

Shocks:

	Front	Rear
Piston:	1.5 AE	3x1.5AE
Oil:	40AE	25AE
Spring:	purple	yellow
Limiters:	4	2mm
Cup Offset:		
Stroke:		
Free Length:		
Notes:		

Track Info:

Size:	Small ☐	Medium ☐	Large ☑	Extra Large ☐
Surfaces:	Dirt ☐	Carpet ☐	Astroturf ☑	Multi Surface ☐
Traction:	Low ☐	Medium ☐	High ☑	Very High ☑
Moisture:	Dry ☑	Damp ☐	Wet ☐	
Condition:	Indoor ☑	Outdoor ☐	Dusty ☐	Hard Packed ☐
	Bumpy ☐	Grooved ☐	Smooth ☐	Loamy ☐

Temperature: Ambient: 22° Track:
Notes:

Tires:

Schumacher Cut-Stagger **:F - Tires - R:** Schumacher Minipin
Yellow **:F - Compound - R:** Yellow
- **:F - Insert - R:** Proline close cell
PL2735-02 **:F - Wheel - R:** PL 2736-02
:F - Notes - R:

Body & Wing:

Body: Proline Bulldog
Wing: Proline 6250-17
Wing Angle: 0° ☑ 3° ☐ 6° ☐
Notes:

Race Results:

Qualify: 2 **Main:** 2
Finish: 2 **TQ:** ☐
Best Lap Time:

Vehicle Comments:

Total Vehicle Weight: