RC10 B5M TEAM KIT

Setup Sheet

Driver: Matthew Gonzales
Track: SDRC 2
Date: Some date in a galaxy far far away
Event: Club racing

Reset Forms

Front Suspension:

Camber: -1 °
Total Toe: 0 °
Ride Height: 24mm
Arm Type: B5 Standard
Tower Type: B5 Standard
Caster Block Insert: 5 °
Kick-Up Angle: 25 °

Notes:
Standard Front Caster Blocks
Standard Steering Blocks
Aluminum Steering Set
Aluminum Hinge Pin Brace
Glued In Steering Block Inserts

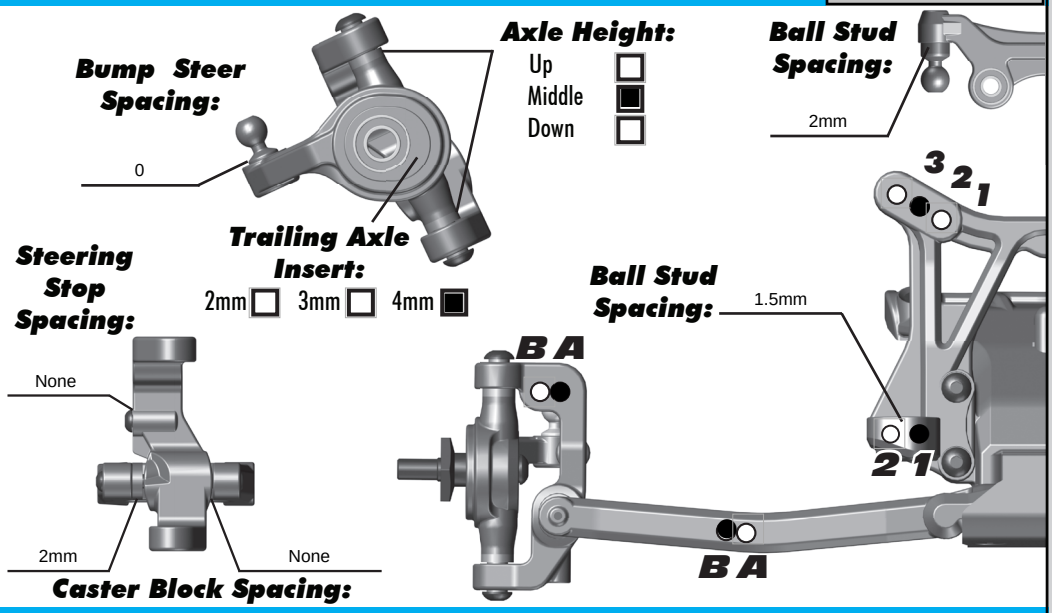

Rear Suspension:

Camber: -1 °
Ride Height: 24mm
Hub Spacing:
Forward ☐ Middle ■ Back ☐

Notes:
Aluminum C and D Mounts
Exotek Wing Mounts
Aluminum Ball stud mount
B5 Standard Rear Arms
Schelle Battery Strap

Anti Roll Bar:
None ■
Black (1.2mm) ☐
Silver (1.3mm) ☐
Gold (1.4mm) ☐

Rear Hub Link Setting:
A — C B A — Up ☐ Down ☐
B — A — Up ■ Down ☐

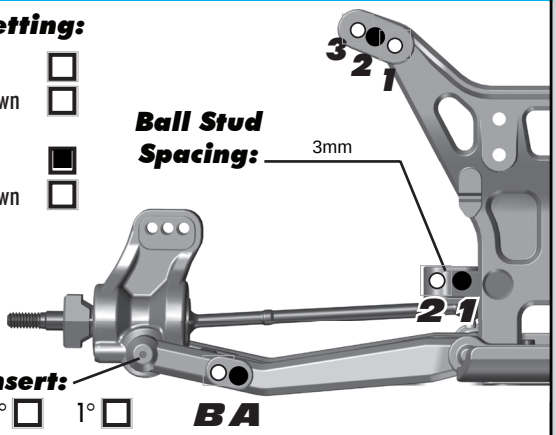

Arm Mount:
Inboard Toe: 3 °
Anti-Squat: 1 °
Hub Insert: 0° ■ 0.5° ☐ 1° ☐

Electronics:

Radio: ____ **Servo:** ____
EPA: Throttle: ____ % **Brake:** ____ %
ESC: LRP Flow
ESC Settings: Blinky Mode
Motor: ____
Wind: 17.5 **Timing:** ____
Pinion: 31 **Spur:** 69
Battery: LRP 7200
Battery Position: Back

Drivetrain:

Differential:
Ball: ■
Setting: MIP Puck Tight
Gear: ☐
Oil: ____

Slipper Clutch:

Type: Schelle
# of Pads: 3 Red,Red,White
Notes: ____

Shocks:

	Front	Rear
Piston:	3x1.4 Flat	Schelle 2x1.6
Oil:	35 wt	30 wt
Spring:	AE White	AE Green
Limiters:	2	2
Cup Offset:	5mm	5mm
Stroke:		
Free Length:		
Notes:		

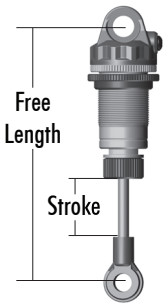

Track Info:

Size:	Small ☐	Medium ☐	Large ☐	Extra Large ☐
Surfaces:	Dirt ☐	Carpet ☐	Astroturf ☐	Multi Surface ☐
Traction:	Low ☐	Medium ☐	High ☐	Very High ☐
Moisture:	Dry ☐	Damp ☐	Wet ☐	
Condition:	Indoor ☐	Outdoor ☐	Dusty ☐	Hard Packed ☐
	Bumpy ☐	Grooved ☐	Smooth ☐	Loamy ☐

Temperature: Ambient: ____ Track: ____
Notes: ____

Tires:

Tires (F/R): Chainlinks / Chainlinks
Compound (F/R): Clay / Clay
Insert (F/R): AKA Evo Red / AKA Hexlite
Wheel (F/R): AKA Evo / AKA Evo
Notes: ____

Body & Wing:

Body: Jconcepts Finnisher
Wing: Jconcepts 6.5
Wing Angle: 0° ■ 3° ☐ 6° ☐
Notes: Lip cut to 2 line

Race Results:

Qualify: ____ **Main:** ____
Finish: ____ **TQ:** ☐
Best Lap Time: ____

Vehicle Comments:

Protek ti screws kit

Total Vehicle Weight: 1538