RC10 B5M TEAM KIT

Setup Sheet

Driver: Jesper Rasmussen **Date:** 9-11/1/2015

Track: DHI CUP TRACK 2015 **Event:** DHI CUP

Reset Forms

Front Suspension:

Camber: -1.5 °
Total Toe: 0 °
Ride Height: 18
Arm Type: B5m hard
Tower Type: B5m std
Caster Block Insert: 0 °
Kick-Up Angle: 25 °

Notes:

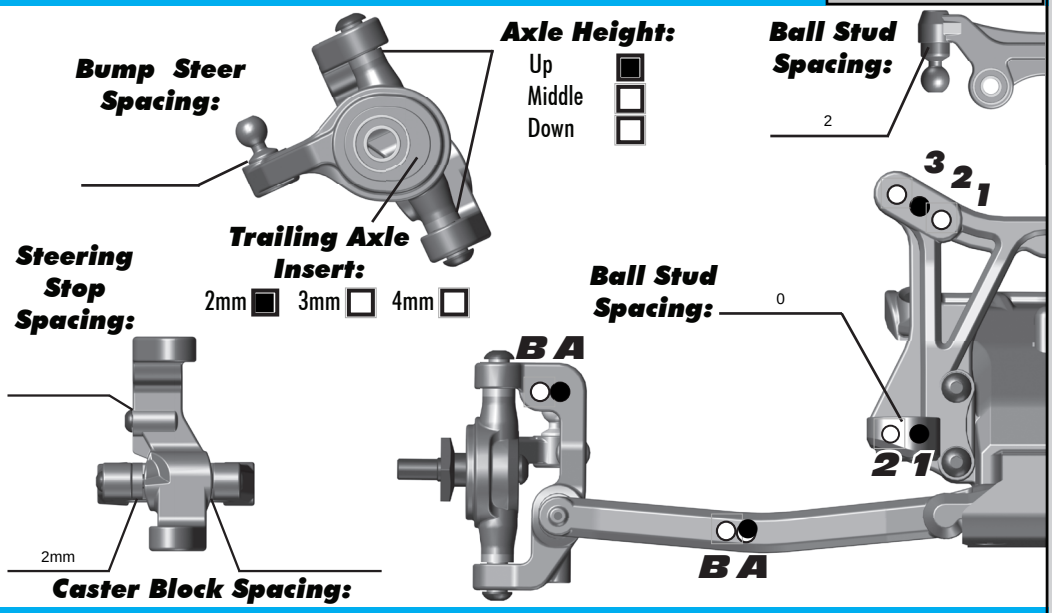

Rear Suspension:

Camber: -1.5 °
Ride Height: 18
Hub Spacing:
Forward ☐ Middle ■ Back ☐

Notes: HARD ARMS
2 second hole and 3mm under ball

3 gear box

Anti Roll Bar:
None ☐
Black (1.2mm) ■
Silver (1.3mm) ☐
Gold (1.4mm) ☐

Rear Hub Link Setting:
A (C B A) Up ☐ Down ☐
B (B A) Up ☐ Down ☐

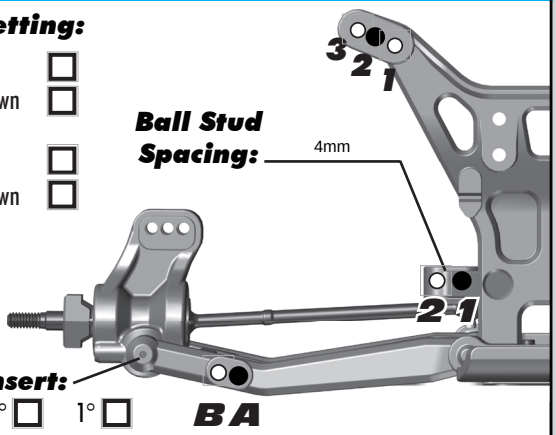

Arm Mount:
Inboard Toe: 2.5 °
Anti-Squat: 3 °
Hub Insert: 0° ■ 0.5° ☐ 1° ☐

Electronics:

Radio: Sanwa M12 **Servo:** SAVÔX
EPA: Throttle: 100 % **Brake:** 82 %
ESC: Hobbywing
ESC Settings:
Motor: REEDY
Wind: 7.5 **Timing:** 20
Pinion: 24 **Spur:** 81
Battery: Reedy shorty
Battery Position: front

Drivetrain:

Differential:
Ball: ☐
Setting:
Gear: ■
Oil: 3000

Slipper Clutch:

Type: 2 plads
# of Pads:
Notes:

Shocks:

	Front	Rear
Piston:	2x1.6	2x1.6
Oil:	35	30
Spring:	yellow yatabe	black yatabe
Limiters:	2	2
Cup Offset:	+5	+5
Stroke:	19mm	26.5mm
Free Length:		
Notes:		

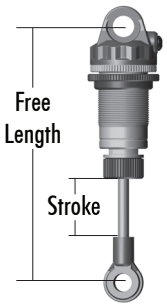

Track Info:

Size:	Small ☐	Medium ☐	Large ■	Extra Large ☐
Surfaces:	Dirt ☐	Carpet ■	Astroturf ☐	Multi Surface ☐
Traction:	Low ☐	Medium ☐	High ■	Very High ☐
Moisture:	Dry ■	Damp ☐	Wet ☐	
Condition:	Indoor ■	Outdoor ☐	Dusty ☐	Hard Packed ☐
	Bumpy ☐	Grooved ☐	Smooth ■	Loamy ☐

Temperature: Ambient: 21 Track: dhi cup 2015
Notes:

Tires:

Tires (F/R): control / control
Compound (F/R): yellow / yellow
Insert (F/R): nono / meduim schumacher
Wheel (F/R): AE / AE
Notes:

Body & Wing:

Body: JConcpets
Wing: JConcepts 6.5"
Wing Angle: 0° ☐ 3° ■ 6° ☐
Notes:

Race Results:

Qualify: 8th **Main:** A
Finish: 7th **TQ:** ☐
Best Lap Time:

Vehicle Comments:

Total Vehicle Weight:

:: For more setups, visit RC10.com and click on "Setup Sheets"