RC10 B5 TEAM KIT **Setup Sheet**

Driver: Ben Jemison **Date:** 8/3/2014
Track: York indoors **Event:** Club night

Front Suspension:

Editable by Arn0 at PetitRC.com

Camber: -1 °
Total Toe: °
Ride Height: 23mm
Arm Type: Standard
Tower Type: Standard
Caster Block Insert: 5 °
Kick-Up Angle: 25 °

Notes:

Bump Steer Spacing: 0

Axle Height: Up ☐ Middle ☑ Down ☐

Ball Stud Spacing:

Trailing Axle Insert: 2mm ☐ 3mm ☐ 4mm ☑

Steering Stop Spacing: 2mm

Caster Block Spacing:

Ball Stud Spacing: 2mm

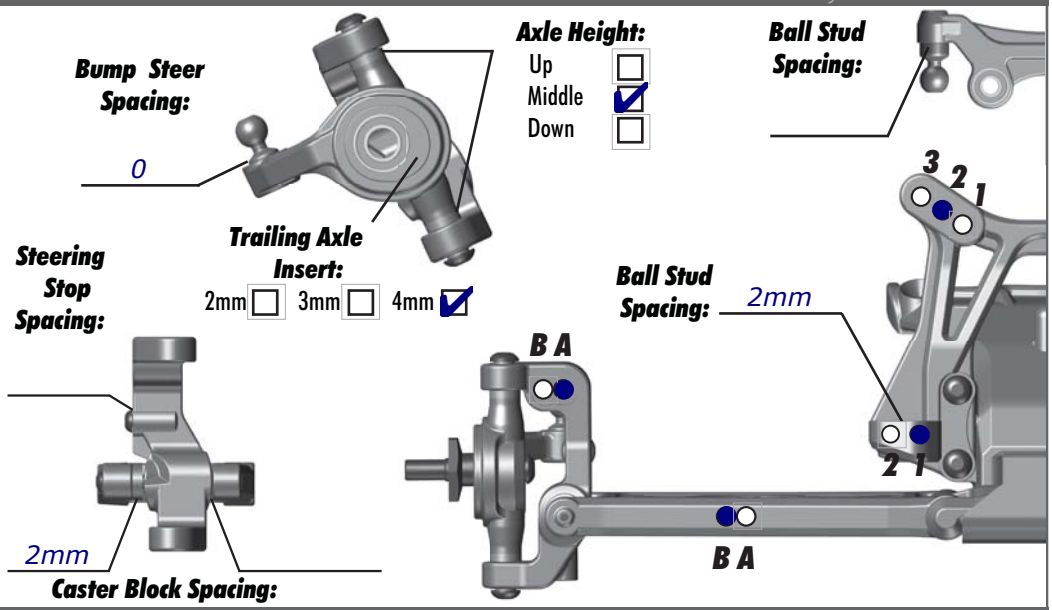

Rear Suspension:

Camber: -1 °
Ride Height: 23
Hub Spacing:
Forward ☐ Middle ☑ Back ☐

Notes:

Anti Roll Bar:
None ☑
Black (1.2mm) ☐
Silver (1.3mm) ☐
Gold (1.4mm) ☐

Rear Hub Link Setting:
A — Up ☑ Down ☐
B — Up ☐ Down ☐

Ball Stud Spacing: 2

Arm Mount:
Inboard Toe: 3 °
Anti-Squat: 2

Hub Insert: 0° ☑ 0.5° ☐ 1° ☐

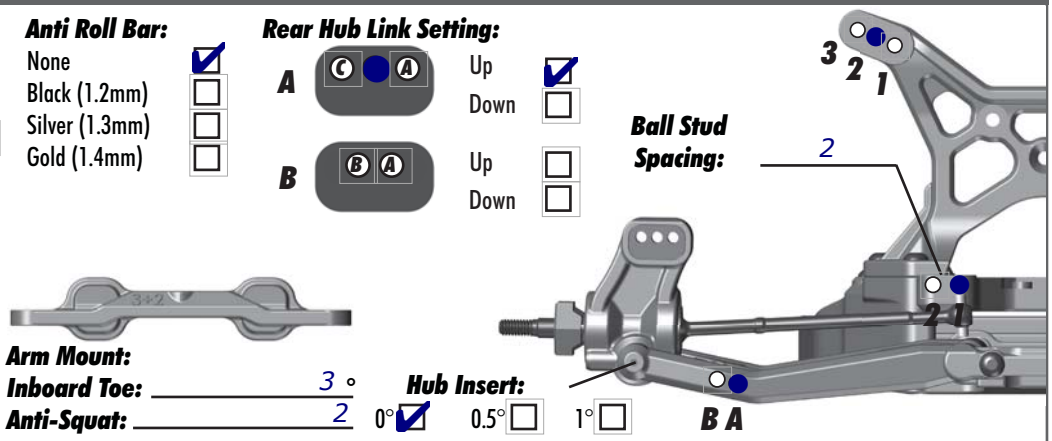

Electronics:

Radio: Sanwa **Servo:** XP
EPA: Throttle: 100 % **Brake:** 100 %
ESC: Lrp
ESC Settings:
Motor: Reedy Mach 2
Wind: 7.5 **Timing:**
Pinion: 23 **Spur:** 81
Battery: Reedy saddle
Battery Position: Forwards

Drivetrain:

Differential:
Ball: ☑
Setting: Just right (tight)
Gear: ☐
Oil:

Slipper Clutch:

Type:
# of Pads: 3
Notes: Set to lift wheels 1"

Shocks:

	Front	Rear
Piston:	1.6	1.7
Oil:	35	30
Spring:	AE white	AE green
Limiters:	0.060	0.030
Cup Offset:	Medium	Medium
Stroke:		
Free Length:		
Notes:		

Track Info:

Size:	Small ☑	Medium ☑	Large ☐	Extra Large ☐
Surfaces:	Dirt ☐	Carpet ☑	Astroturf ☐	Multi Surface ☑
Traction:	Low ☑	Medium ☐	High ☐	Very High ☐
Moisture:	Dry ☑	Damp ☐	Wet ☐	
Condition:	Indoor ☑	Outdoor ☐	Dusty ☑	Hard Packed ☐
	Bumpy ☐	Grooved ☐	Smooth ☐	Loamy ☐

Temperature: Ambient: Track:
Notes:

Tires:

Schumacher mini pin **:F - Tires - R:** Schumacher mini pin
Yellow **:F - Compound - R:** Yellow
Kwf **:F - Insert - R:** Kwf
AE white **:F - Wheel - R:** AE white
:F - Notes - R:

Body & Wing:

Body: Kit
Wing: Lmr
Wing Angle: 0° ☐ 3° ☑ 6° ☐
Notes:

Race Results:

Qualify: **Main:** A
Finish: 1 **TQ:** ☑
Best Lap Time:

Vehicle Comments:

Total Vehicle Weight: