SETUP SHEET for the Team Associated RC10B4

Driver *Jörn Neumann*

Track / City *Yatabe Arena*

Event *International Off-Road GP* Date *Feb 2010*

FRONT

SHOCK MOUNTING & CAMBER LINK

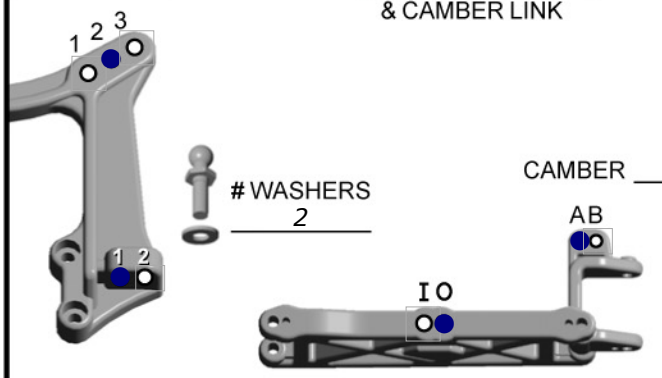

WASHERS *2*

CAMBER *-1* °

RIDE HEIGHT _____

TOE-IN (+) / OUT (-) *0* °

BUMP STEER SPACER *2*

AXLE HEIGHT
- ☐ up
- ☑ middle
- ☐ down

CASTER
- ☐ 20°
- ☐ 25°
- ☑ 30°

STEERING BLOCK ☑ trailing ☐ inline

REAR

SHOCK MOUNTING & CAMBER LINK

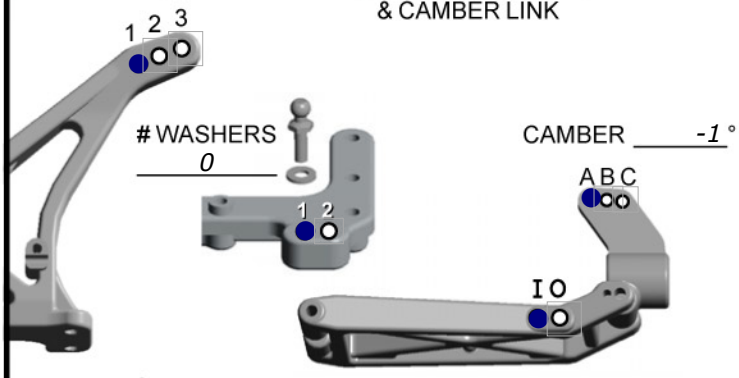

WASHERS *0*

CAMBER *-1* °

RIDE HEIGHT _____

ANTI-SQUAT
- ☐ 0°
- ☐ 1°
- ☑ 2°
- ☐ 3°

WHEELBASE
- ☐ long
- ☑ medium
- ☐ short

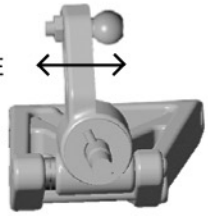

ANTI-ROLL BAR
- ☑ none
- ☐ black (soft)
- ☐ sivler (med)
- ☐ gold (heavy)

FRONT SHOCKS

OIL *35* wt

SPRING (color) *Brown*

PISTON # *1*

SHAFT ☑ unobtainium ☐ STD

LIMITERS *0*

REAR SHOCKS

OIL *30* wt

SPRING (color) *Green*

PISTON # *2*

SHAFT ☑ unobtainium ☐ STD

LIMITERS *0*

FRONT TIRES & WHEELS

FRONT TIRES *Panther (Controlled Tires)*

INSERTS *Stock* WHEELS *JConcepts*

REAR TIRES & WHEELS

REAR TIRES *Panther (Controlled Tires)*

INSERTS *Stock* WHEELS *JConcepts*

TRACTION COMPOUND _____

RADIO/BATTERIES

RADIO *Sanwa M11* SERVO *Sanwa*

ESC *LRP SXX TC Spec*

DRAG BRAKE _____ INIT BRAKE _____

BATTERY PLACEMENT ☐ front ☑ rear

BATTERIES *LRP 5900 50C*

MOTOR

MOTOR & WIND *LRP 8.5 Octa*

BRUSHES _____

SPRING _____

PINION / SPUR *25* / *81*

OTHER

BODY *JConcepts*

WING *JConcepts*

WING ANGLE ☐ 0° ☐ 3° ☑ 6°

CHASSIS *Plastic*

CONDITIONS

- ☐ smooth
- ☐ bumpy
- ☐ low traction
- ☐ med traction
- ☐ high traction
- ☐ sandy
- ☐ soft dirt
- ☐ grass
- ☐ blue groove
- ☐ clay
- ☐ wet
- ☐ dry
- ☐ dusty
- ☐ other

COMMENTS

NOTES _____

For more setups, visit RC10.com and PetitRC.com

Be environmental friendly, print only if needed