SETUP SHEET for the Team Associated RC10B4

Driver _____

Track / City *AEC - Maison Alfort*

Event *Ligue-Region* Date *05.2009*

FRONT

SHOCK MOUNTING & CAMBER LINK

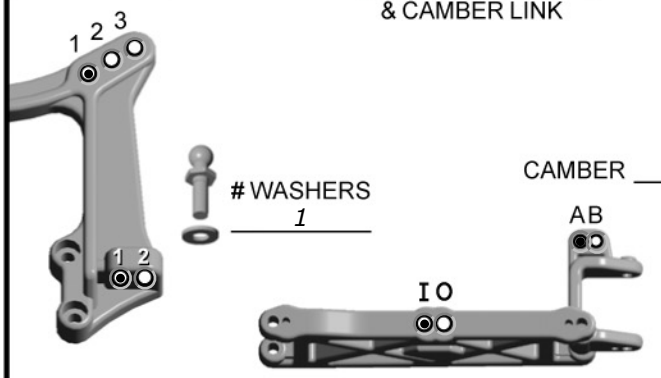

RIDE HEIGHT _____

TOE-IN (+) / OUT (-) *0* °

BUMP STEER SPACER *2*

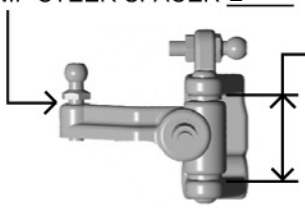

AXLE HEIGHT
- ☐ up
- ☑ middle
- ☐ down

CASTER
- ☐ 20°
- ☐ 25°
- ☑ 30°

STEERING BLOCK ☑ trailing ☐ inline

REAR

SHOCK MOUNTING & CAMBER LINK

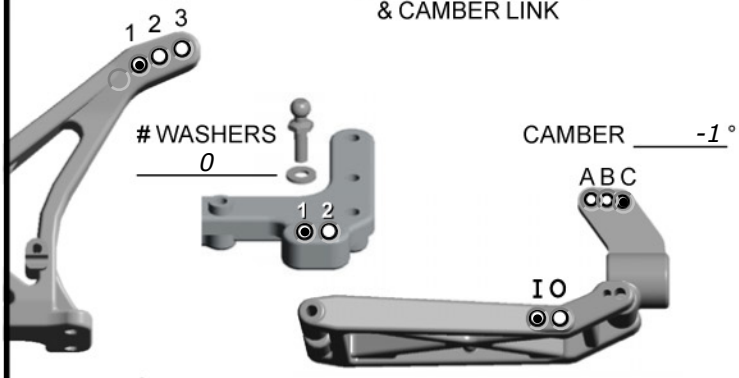

RIDE HEIGHT _____

ANTI-SQUAT
- ☐ 0°
- ☐ 1°
- ☑ 2°
- ☐ 3°

WHEELBASE
- ☐ long
- ☑ medium
- ☐ short

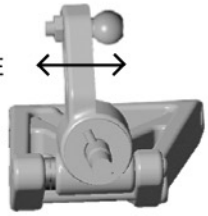

ANTI-ROLL BAR
- ☑ none
- ☐ black (soft)
- ☐ sivler (med)
- ☐ gold (heavy)

FRONT SHOCKS

OIL *35* wt

SPRING (color) *Silver (3.85 lb/in)* PISTON # *2*

SHAFT ☑ unobtainium ☐ STD # LIMITERS *0*

REAR SHOCKS

OIL *30* wt

SPRING (color) *Silver (2.1 lb/in)* PISTON # _____

SHAFT ☑ unobtainium ☐ STD # LIMITERS *2*

FRONT TIRES & WHEELS

FRONT TIRES *Schumacher Stagger Yellow*

INSERTS _____ WHEELS *JConcepts*

REAR TIRES & WHEELS

REAR TIRES *Schumacher Mini Pin Yellow*

INSERTS *Losi* WHEELS *JConcepts*

TRACTION COMPOUND _____

RADIO/BATTERIES

RADIO _____ SERVO _____

ESC _____

DRAG BRAKE _____ INIT BRAKE _____

BATTERY PLACEMENT ☑ front ☐ rear

BATTERIES *Reedy LiPo 5000mAh*

MOTOR

MOTOR & WIND _____

BRUSHES _____

SPRING _____

PINION / SPUR *24* / *81*

OTHER

BODY *JConcepts Hi-Flow*

WING *Proline 5"*

WING ANGLE ☐ 0° ☐ 3° ☑ 6°

CHASSIS *Factory Team*

CONDITIONS

- ☑ smooth
- ☐ bumpy
- ☐ low traction
- ☑ med traction
- ☑ high traction
- ☐ sandy
- ☐ soft dirt
- ☐ grass
- ☐ blue groove
- ☐ clay
- ☐ wet
- ☑ dry
- ☐ dusty
- ☑ other

COMMENTS

NOTES *Front bulkhead Ghea Racing*

Rear toe: 3.5°

Track condition: Astroturf with paved area

For more setups, visit RC10.com and PetitRC.com

Be environmental friendly, print only if needed