SETUP SHEET for the Team Associated RC10B4

Driver *Julien Fromentin*

Track / City *Maisons Alfort*

Event *Ligue-Region* Date *25.05.2008*

FRONT

SHOCK MOUNTING & CAMBER LINK

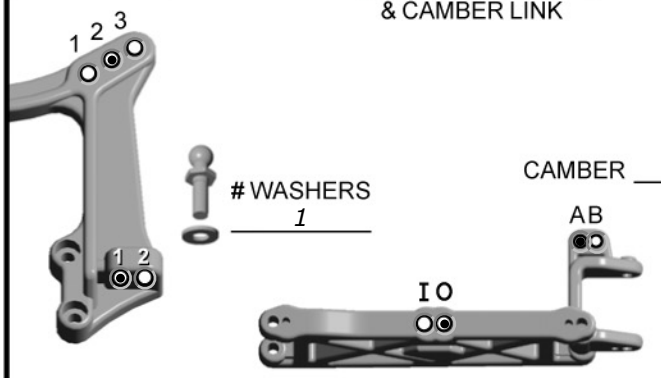

WASHERS *1*

CAMBER *-1* °

RIDE HEIGHT _____

TOE-IN (+) / OUT (-) ____ °

BUMP STEER SPACER _____

AXLE HEIGHT
- ☐ up
- ☑ middle
- ☐ down

CASTER
- ☐ 20°
- ☑ 25°
- ☐ 30°

STEERING BLOCK ☑ trailing ☐ inline

REAR

SHOCK MOUNTING & CAMBER LINK

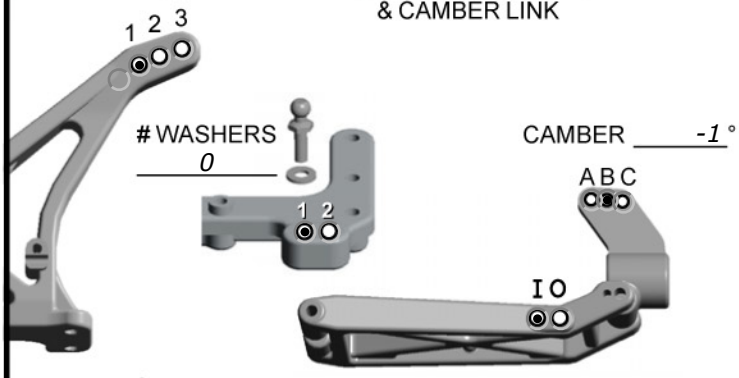

WASHERS *0*

CAMBER *-1* °

RIDE HEIGHT _____

ANTI-SQUAT
- ☐ 0°
- ☐ 1°
- ☑ 2°
- ☐ 3°

WHEELBASE
- ☐ long
- ☑ medium
- ☐ short

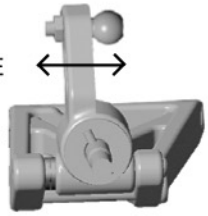

ANTI-ROLL BAR
- ☑ none
- ☐ black (soft)
- ☐ sivler (med)
- ☐ gold (heavy)

FRONT SHOCKS

OIL *30* wt

SPRING (color) *Silver (3.85 lb/in)* PISTON # *2*

SHAFT ☑ unobtainium ☐ STD # LIMITERS *0*

REAR SHOCKS

OIL *25* wt

SPRING (color) *Silver (2.1 lb/in)* PISTON # *2*

SHAFT ☑ unobtainium ☐ STD # LIMITERS *0*

FRONT TIRES & WHEELS

FRONT TIRES *Schumacher Stagger Yellow*

INSERTS _____ WHEELS *JConcepts*

REAR TIRES & WHEELS

REAR TIRES *Schumacher Mini Pin Yellow*

INSERTS *Losi* WHEELS *Losi*

TRACTION COMPOUND _____

RADIO/BATTERIES

RADIO *Sanwa M8* SERVO *S9402*

ESC *NOSRAM Matrix Evo*

DRAG BRAKE _____ INIT BRAKE _____

BATTERY PLACEMENT ☐ front ☐ rear

BATTERIES *Orion 4200mAh SHO*

MOTOR

MOTOR & WIND *6.5*

BRUSHES _____

SPRING _____

PINION / SPUR *23* / *81*

OTHER

BODY *JConcepts Illuzion*

WING *JConcepts 7"*

WING ANGLE ☐ 0° ☑ 3° ☐ 6°

CHASSIS *Plastic*

CONDITIONS

- ☐ smooth
- ☐ bumpy
- ☐ low traction
- ☐ med traction
- ☐ high traction
- ☐ sandy
- ☐ soft dirt
- ☐ grass
- ☐ blue groove
- ☐ clay
- ☐ wet
- ☑ dry
- ☐ dusty
- ☐ other

COMMENTS

NOTES *When track turns wet: Green front spring, Front & Rear tyres: Ballistic Pink*

Track condition: Astroturf

For more setups, visit RC10.com and PetitRC.com

Be environmental friendly, print only if needed