SETUP SHEET for the Team Associated RC10B4

Driver _____

Track / City *TEB - Gargenville*

Event *2009 French Cup* Date *30-31.08.2008*

FRONT

SHOCK MOUNTING & CAMBER LINK

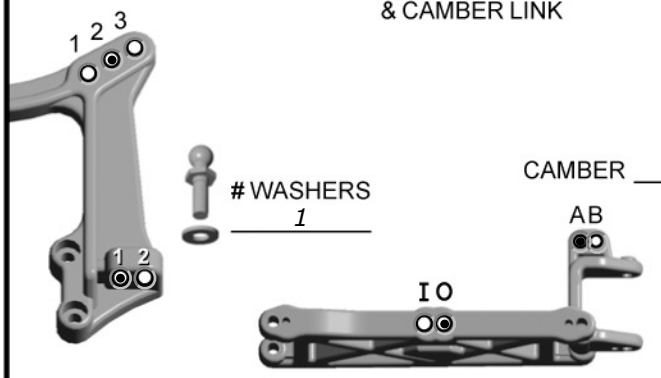

WASHERS *1*

CAMBER *-1* °

RIDE HEIGHT *Arms level (triangles horizontaux)*

TOE-IN (+) / OUT (-) *0* °

BUMP STEER SPACER *2*

AXLE HEIGHT
- ☐ up
- ☑ middle
- ☐ down

CASTER
- ☐ 20°
- ☐ 25°
- ☑ 30°

STEERING BLOCK ☑ trailing ☐ inline

REAR

SHOCK MOUNTING & CAMBER LINK

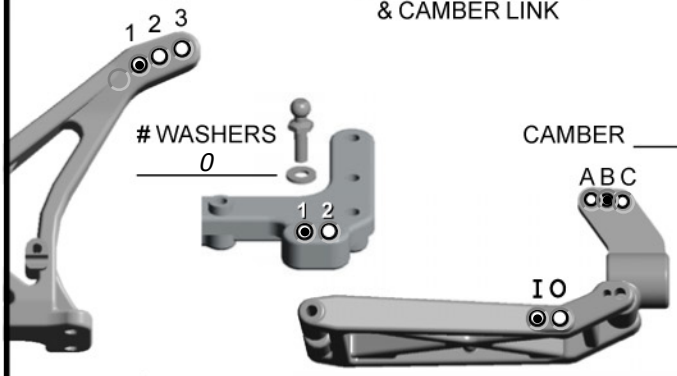

WASHERS *0*

CAMBER *-1* °

RIDE HEIGHT *Driveshafts level (cardans horizontaux)*

ANTI-SQUAT
- ☐ 0°
- ☐ 1°
- ☑ 2°
- ☐ 3°

WHEELBASE
- ☐ long
- ☑ medium
- ☐ short

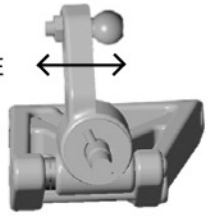

ANTI-ROLL BAR
- ☑ none
- ☐ black (soft)
- ☐ sivler (med)
- ☐ gold (heavy)

FRONT SHOCKS

OIL *35* wt *Losi*

SPRING (color) *Silver (3.85 lb/in)* PISTON # _____

SHAFT ☑ unobtainium ☐ STD # LIMITERS _____

REAR SHOCKS

OIL *30* wt *Losi*

SPRING (color) *Silver (2.1 lb/in)* PISTON # *2*

SHAFT ☑ unobtainium ☐ STD # LIMITERS *1*

FRONT TIRES & WHEELS

FRONT TIRES *Schumacher Mini Spike Yellow (dry)*

INSERTS *Schum Blue* WHEELS *Associated*

REAR TIRES & WHEELS

REAR TIRES *Schumacher Mini Spike Yellow (dry)*

INSERTS *Schum Blue* WHEELS *Associated*

TRACTION COMPOUND _____

RADIO/BATTERIES

RADIO _____ SERVO _____

ESC _____

DRAG BRAKE _____ INIT BRAKE _____

BATTERY PLACEMENT ☐ front ☑ rear

BATTERIES *Orion SHO 4200mAh (5 cells)*

MOTOR

MOTOR & WIND *6.5*

BRUSHES _____

SPRING _____

PINION / SPUR *21* / *81*

OTHER

BODY *JConcepts Hi-Flow*

WING *JConcepts 6"*

WING ANGLE ☐ 0° ☐ 3° ☑ 6°

CHASSIS *Plastic*

CONDITIONS

- ☐ smooth
- ☑ bumpy
- ☑ low traction
- ☑ med traction
- ☐ high traction
- ☐ sandy
- ☐ soft dirt
- ☑ grass
- ☐ blue groove
- ☐ clay

- ☑ wet
- ☑ dry
- ☐ dusty
- ☐ other

COMMENTS

NOTES *Front bulkhead: 28 grs*

Rear chassis: 5 grs

Wet track: Schumacher Mini Spike Front & Rear

For more setups, visit RC10.com and PetitRC.com

Be environmental friendly, print only if needed