BD10 AXON CONVERSION KIT

TC10

"BD10LC" Upper bulkhead BASIC SET UP

PLACE: ■Indoor □Outdoor □Asphalt ■Carpet / ■Flat □Bump
TRACTION: □High ■Medium □Low **TEMP AIR:** **TEMP TRACK:**
TRACK LAYOUT: □Technical ■Mixed □High speed
QF POSITION: **FINAL POSITION:** **BEST LAPTIME:**

FRONT

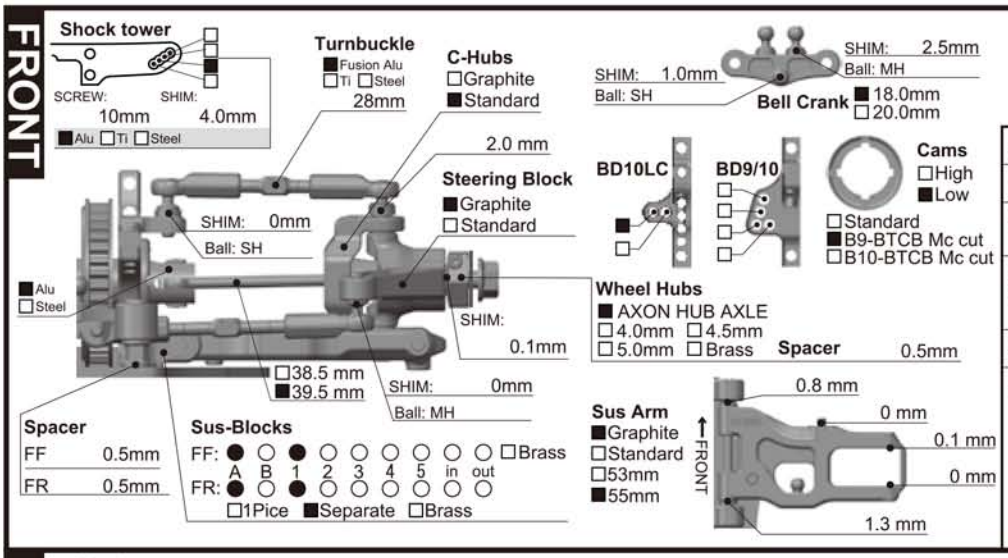

Rod End Ball Size: SHS:Short neck / MH / SH

Ride Height :	5.1mm
Camber Angle :	1.5 °
Anti Roll Bar :	□1.2 ■1.3 □1.4 □Non
Droop :	□Arm lower end ■Sus pin center 9.5mm
Toe Angle :	out 1.2 °
Notes :	

SHOCK ABSORBER

Spring:AXON	HLS C2.8 or SLS C2.8
Oil : AXON 32.5	
Piston :	□3H ■4H
Hole :	1.1mm
Others :	
Bladder :	□V1 ■V2
Others :	
Length :	48.0 mm

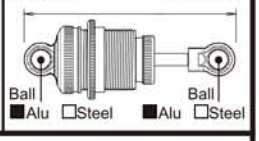

REAR

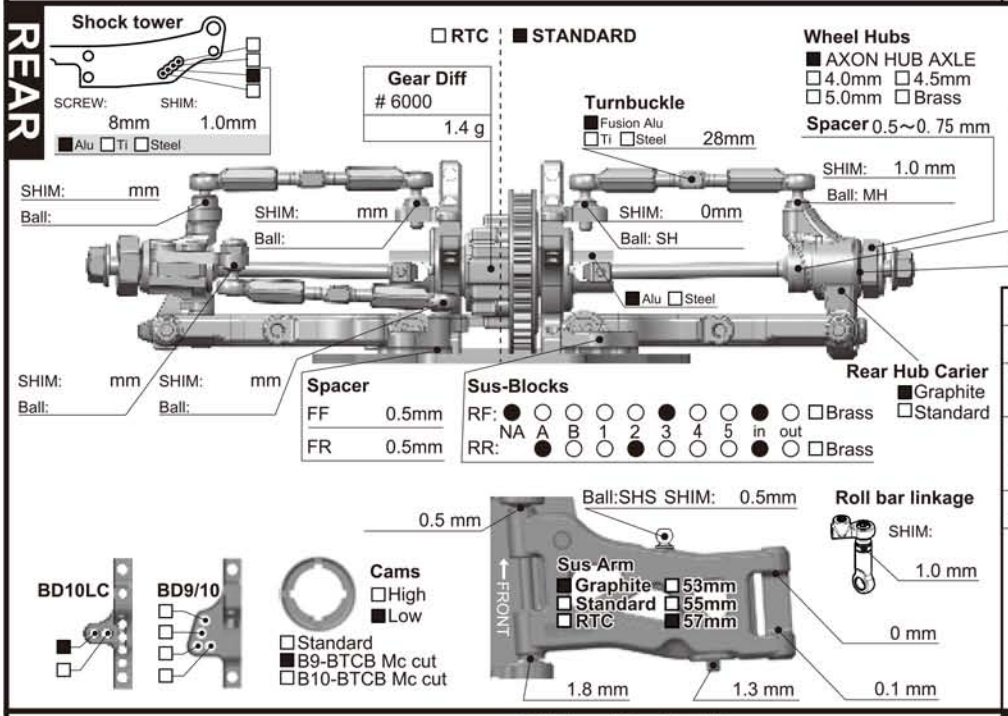

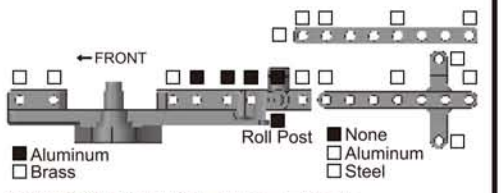

Axle Shaft ■Steel □Alu ■Set screw □Ring clip
SHIM: 0 mm

Ride Height :	5.3 mm
Camber Angle :	1.8 °
Anti Roll Bar :	□1.2 ■1.3 □1.4 □Non
Droop :	□Arm lower end ■Sus pin center 9.0mm
Toe Angle :	in 3.0 °

SHOCK ABSORBER

Spring :	AXON HLS C2.6
Oil :	AXON 32.5
Piston :	□3H ■4H
Hole :	1.1mm
Others :	
Bladder :	□V1 ■V2
Others :	
Length :	49.5 mm

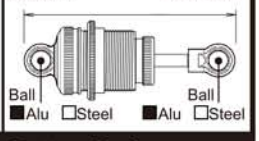

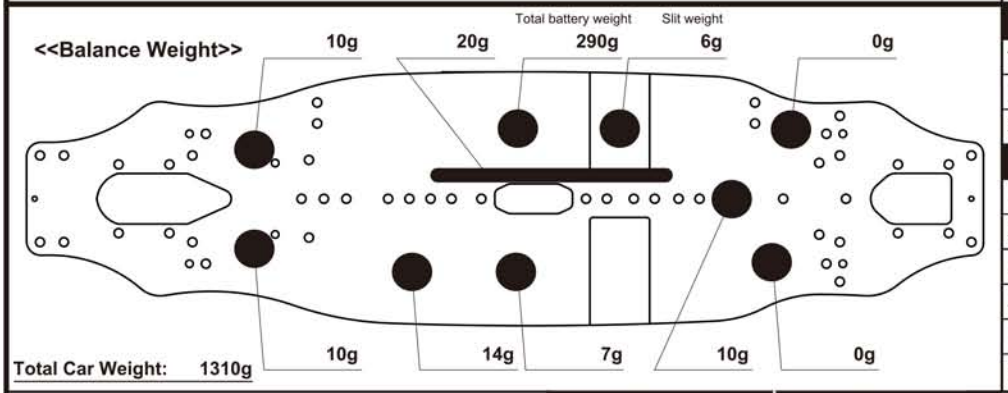

Screw setting <<Button Head>>

Top deck 8pics: 6mm	□Alu ■Ti □Steel
Upper bulkhead 8pics: 8mm	■Alu □Ti □Steel
Shock tower 8pics: 6mm	■Alu □Ti □Steel

Screw setting <<Flat Head>>

Lower bulkhead 8pics: 6mm	□Alu ■Ti □Steel
Sus-blocks ALL: 6mm	□Alu ■Ti □Steel
Bell crank post: 6mm	□Alu ■Ti □Steel
Servo mount: 6mm	□Alu ■Ti □Steel
Motor mount: 6mm	□Alu ■Ti □Steel
Rear roll post: 10mm	□Alu ■Ti □Steel

		FRONT	REAR
Main Chassis: ■Carbon □Aluminum		Tire:	Tire:
Top Deck: ■2.0mm			
Motor:		Insert:	Insert:
Spur Gear:	**Pinion Gear:**	Wheel:	Wheel:
Battery:			
ESC:		Additive:	Additive:
Body: Twister		Notes:	Notes:
Wing: Twister			

Notes :
All aluminum screws use AXON fusion alu screws.
All titanium screws use AXON spring titanium screws.
X10 ball bearings are used for 1060 and 1510 bearings.