SET-UP SHEET

XRAY T4'15

RACE	Snowbird Nationals - winning set-up
TRACK	Park Inn by Radisson
NAME	Alexander Hagberg
CITY / COUNTRY	Orlando / USA
CONTACT	alexander.hagberg@gmail.com

DATE	TEMPERATURE / °F or °C	AIR	TRACK
02/02/2015			

QUALIFYING POSITION	BEST LAPTIME /sec	FINAL POSITION	RACE LENGTH /minutes
1	8,4	1	5

TRACK CONDITION			
	☐ TECHNICAL	☒ CARPET	☐ ASPHALT
		☒ MIXED	☐ FAST
TRACTION	☐ LOW	☐ MEDIUM	☒ HIGH

TRANSMISSION

FRONT		REAR	
SOLID AXLE	☒ YES	BALL DIFFERENTIAL	☐ YES
SOLID ONE WAY DIFFERENTIAL	☐ YES		
ONE WAY DIFFERENTIAL	☐ YES		
GEAR DIFFERENTIAL	☐ YES	GEAR DIFFERENTIAL	☒ YES
OIL	/Cst	OIL	5000 /Cst

PINION / T	27	SPUR GEAR / T	110
FINAL DRIVE RATIO	7.7407	ROLLOUT	

FRONT	SHOCK TYPE	REAR
Kit	SHOCK TYPE	Kit
2.5-2.8	XRAY SPRINGS	2.6
450	OIL /Cst	450
0	REBOUND %	0
☐ YES ☒ NO	FOAM INSERTS	☐ YES ☒ NO
☐ YES ☒ NO	O-RING ON SHAFT	☐ YES ☒ NO

	PISTONS	
☐ 3 HOLES	1.0mm	☐ 3 HOLES
☒ 4 HOLES	1.1mm	☒ 4 HOLES
	1.2mm	
	OTHERS	

1.4	ANTI-ROLL BAR	1.3
THICKNESS/mm		THICKNESS/mm

Jaco	TIRES	Jaco
	INSERTS	
Hudy	ADDITIVE	Hudy
10	ADDITIVE TIMING	10

FRONT LEFT | FRONT RIGHT | TREATED AREA | REAR LEFT | REAR RIGHT

ECCENTRIC BUSHINGS | ROLL CENTER | ECCENTRIC BUSHINGS

FF 1 / 0.5 | FF 1 / 0.5 | RR 1 / 0.5 | RR 1 / 0.5

FR 1 / 0.5 | FR 1 / 0.5 | RF 1 / 0.5 | RF 1 / 0.5

MOTOR	ORCA TX 5.0T	TIMING	10 deg
ESC	ORCA VX3	BATTERIES	ORCA INFINITE 6200 90C
BODY	PF SP6 LW	WING	PF Hard STD
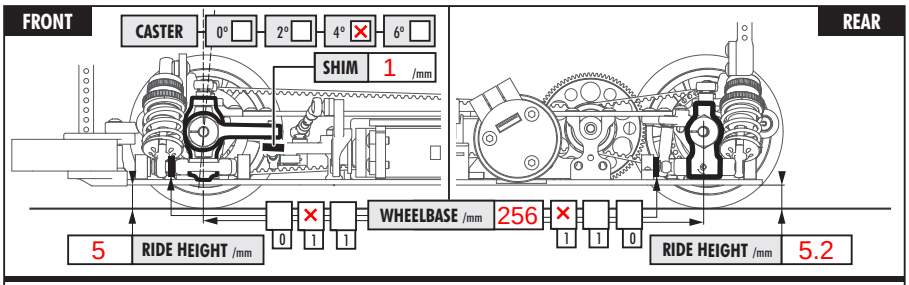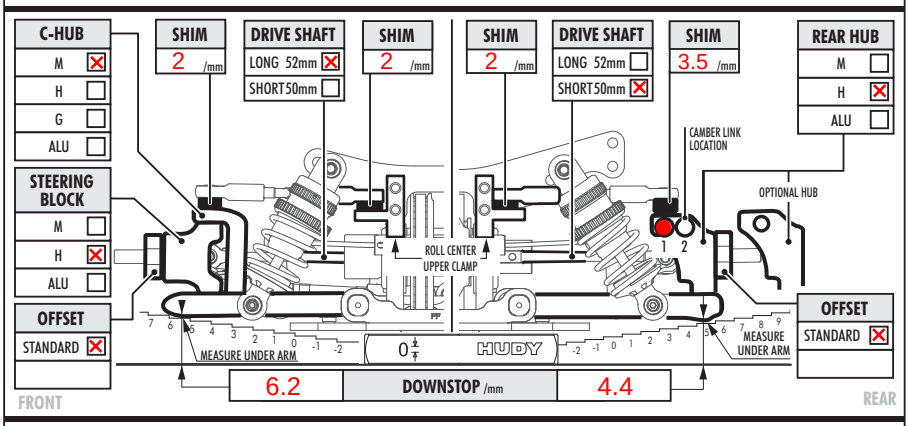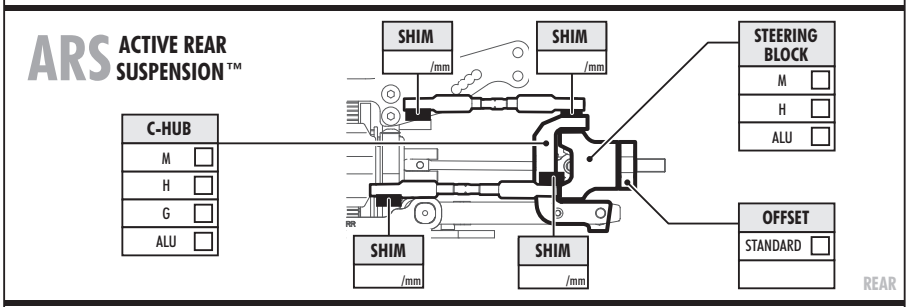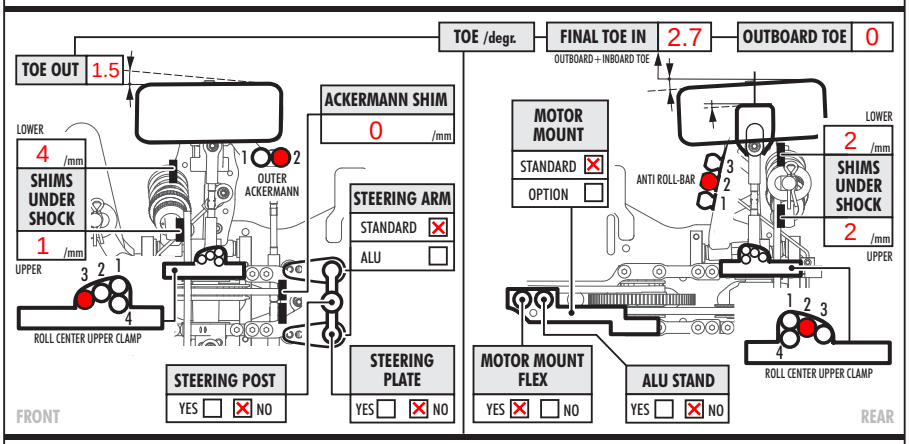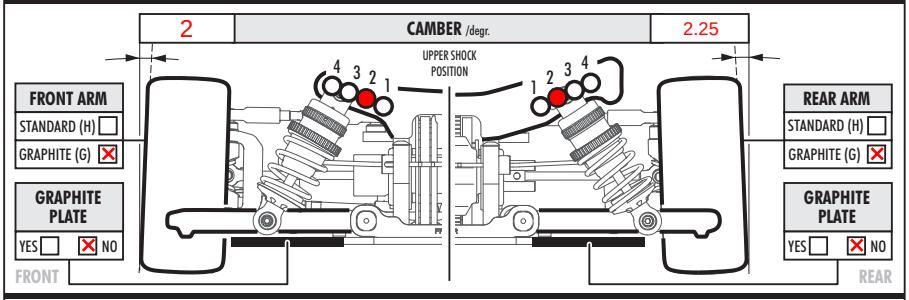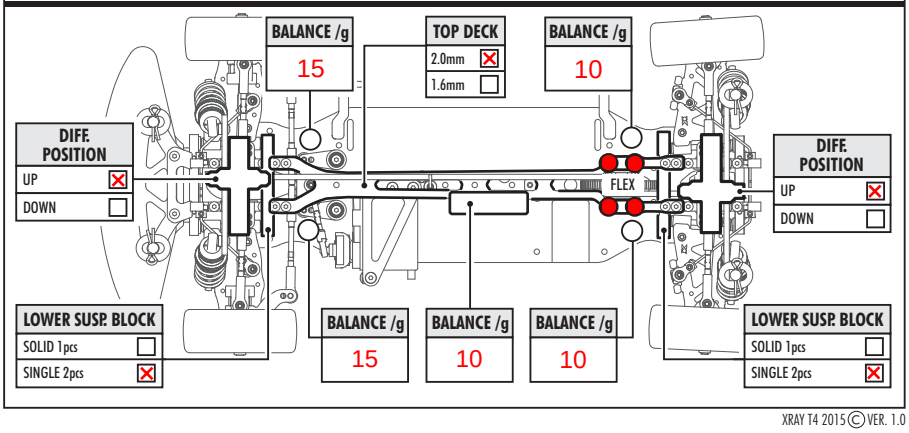
COMMENTS
ECS front driveshafts
Aluminium chassis
Hudy alu servo horn #293501