SET-UP SHEET

XRAY T4'15

RACE	GP3F
TRACK	Longwy
NAME	mathias.rascol
CITY / COUNTRY	Longwy / France
CONTACT	

DATE	20/12/2014	TEMPERATURE / °F or °C	AIR	TRACK

QUALIFYING POSITION	BEST LAPTIME /sec	FINAL POSITION	RACE LENGTH /minutes
32	11,5	32	5

TRACK CONDITION			
	[ ] TECHNICAL	[x] CARPET	[ ] ASPHALT
		[ ] MIXED	[ ] FAST
TRACTION	[ ] LOW	[x] MEDIUM	[ ] HIGH

TRANSMISSION

FRONT		REAR	
SOLID AXLE	[x] YES	BALL DIFFERENTIAL	[ ] YES
SOLID ONE WAY DIFFERENTIAL	[ ] YES		
ONE WAY DIFFERENTIAL	[ ] YES		
GEAR DIFFERENTIAL	[ ] YES	GEAR DIFFERENTIAL	[x] YES
OIL	/Cst	OIL	3000 /Cst

PINION / T		SPUR GEAR / T	
FINAL DRIVE RATIO		ROLLOUT	

FRONT	SHOCK TYPE	REAR
2.5-2.8	XRAY SPRINGS	2.5
400	OIL /Cst	450
0	REBOUND %	0
[ ] YES [x] NO	FOAM INSERTS	[ ] YES [x] NO
[ ] YES [x] NO	O-RING ON SHAFT	[ ] YES [x] NO

	PISTONS	
[ ] 3 HOLES	1.0mm	[ ] 3 HOLES
[x] 4 HOLES	1.1mm	[x] 4 HOLES
	1.2mm	
	OTHERS	

1.4	THICKNESS/mm	ANTI-ROLL BAR	THICKNESS/mm	1.2

CPX	TIRES	CPX
	INSERTS	
LRP Carpet2	ADDITIVE	LRP Carpet2
20	ADDITIVE TIMING	20

FRONT LEFT | FRONT RIGHT | TREATED AREA | REAR LEFT | REAR RIGHT

ECCENTRIC BUSHINGS | ROLL CENTER | ECCENTRIC BUSHINGS

FF / FF: 1 / 0.5 — 1 / 0.5 — RR / RR

FR / FR: 1 / 0.5 — 1 / 0.5 — RF

MOTOR	SkyRC Ares 5.5	TIMING	30
ESC	SkyRC TS 120	BATTERIES	RB
BODY	PFM Speed6	WING	MR33
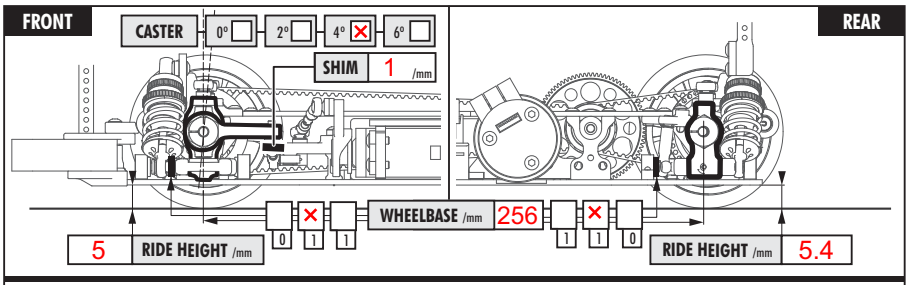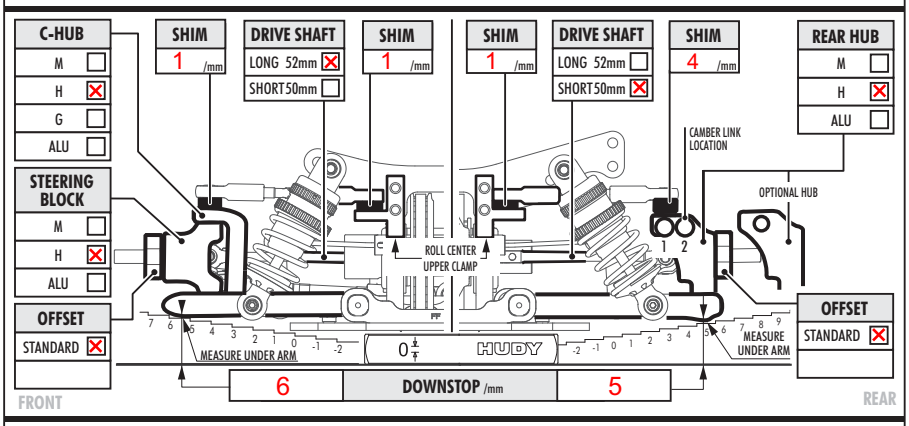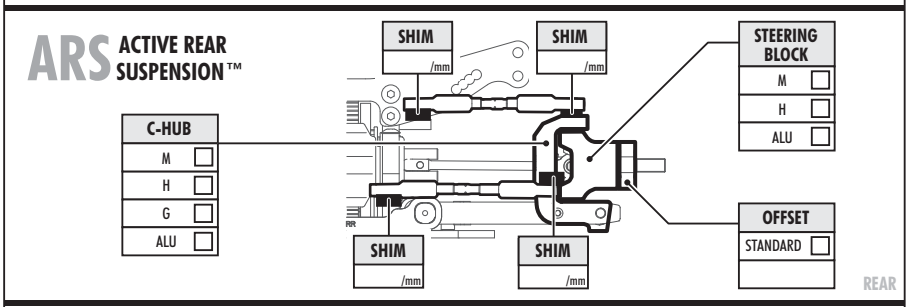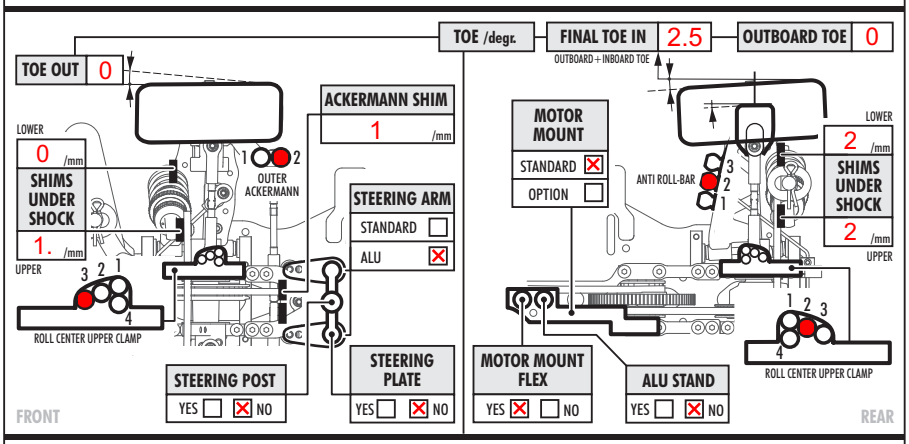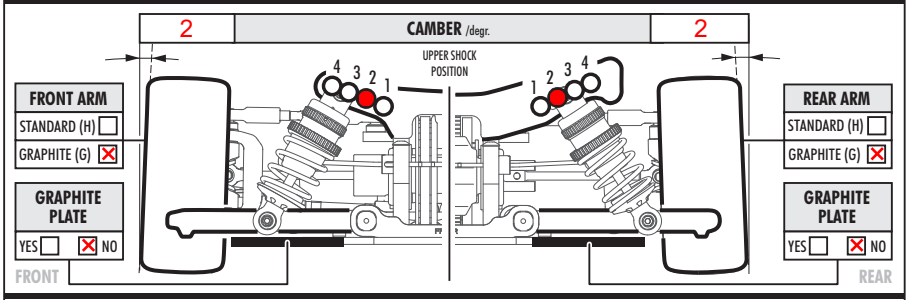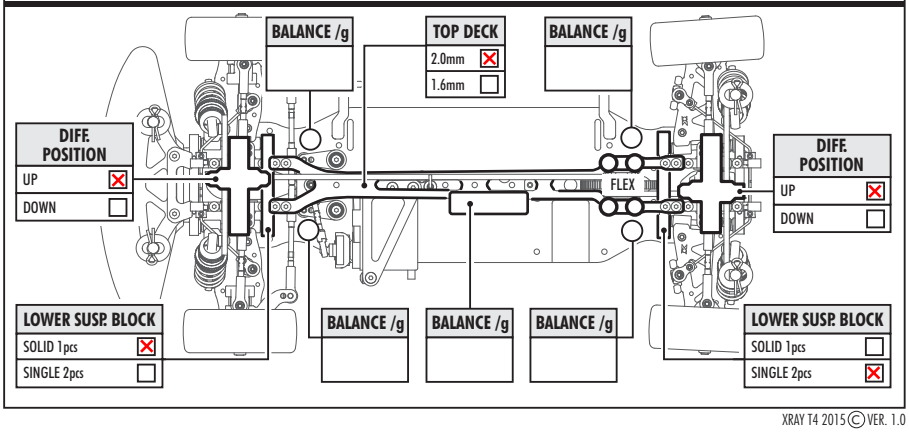
COMMENTS