SET-UP SHEET

XRAY X12'26

RACE	
TRACK	
NAME	DATE

QUAL POSITION	FINAL POSITION	BEST LAPTIME	LAPS	TIME
		/sec	/	

TRACK

COMPOSITION	☐ CARPET	☐ ASPHALT	☐ INDOOR	☐ OUTDOOR
LAYOUT	☐ TECHNICAL	☐ MIXED	☐ FAST	
TRACTION	VERY-LOW ☐ ☐ ☐ ☐ ☐ ☐ ☐ ☐ ☐ VERY-HIGH			

CENTER SHOCK DAMPENER

CENTER SHOCK OIL	/cSt	CENTER SHOCK REBOUND	/%

REAR BUMP SPRING

☐ CONICAL-PROGRESSIVE /C	STRAIGHT-LINEAR ☐ /C

SIDE DAMPING

OIL /cSt

TIRES

FRONT		REAR
	TIRES TYPE	
	DIAMETER /mm	
	ADDITIVE	
	ADDITIVE TIMING	
	WIPE OFF TIME	

SIDE WALL GLUE
DIA. /mm

ADDITIVE AREA
/mm

TRANSMISSION

BALL DIFF	GEAR DIFF	SOLID AXLE
☐	☐	☐
☐ ☐ ☐ ☐ ☐ LOOSE MEDIUM TIGHT	OIL /cSt	

GEARING

PINION / T		SPUR GEAR/T	
FINAL DRIVE RATIO		ROLLOUT	

ELECTRONICS

MOTOR		SERVO	
ESC		BATTERY	

/mm
/mm
/mm

BODY

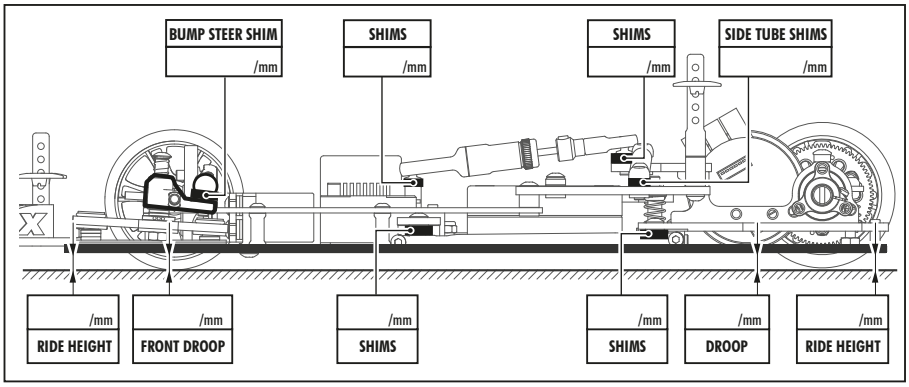

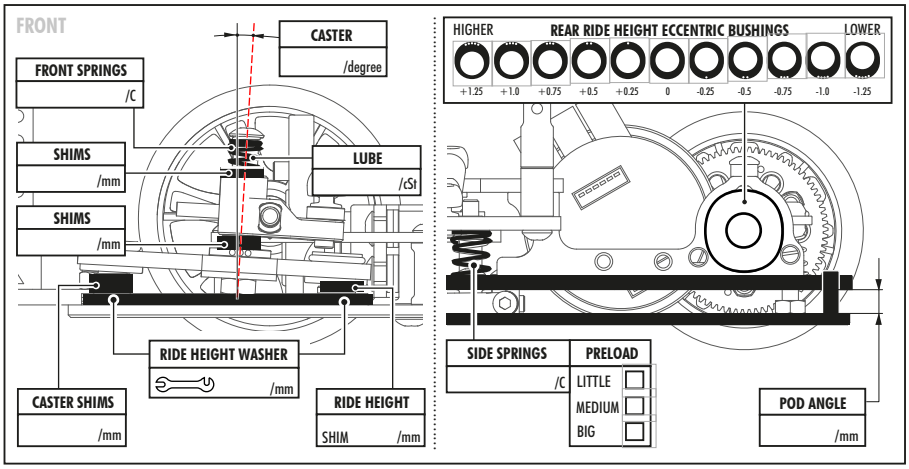

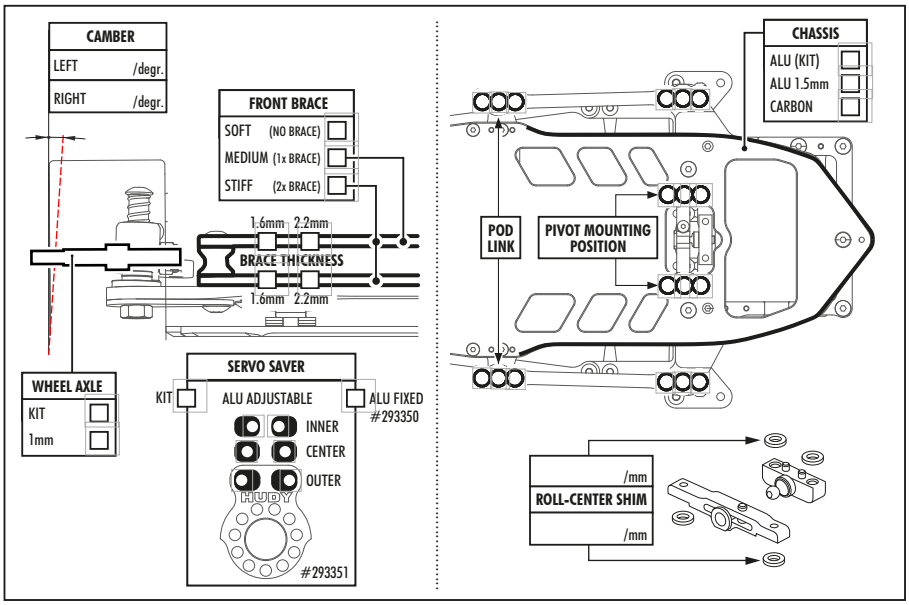

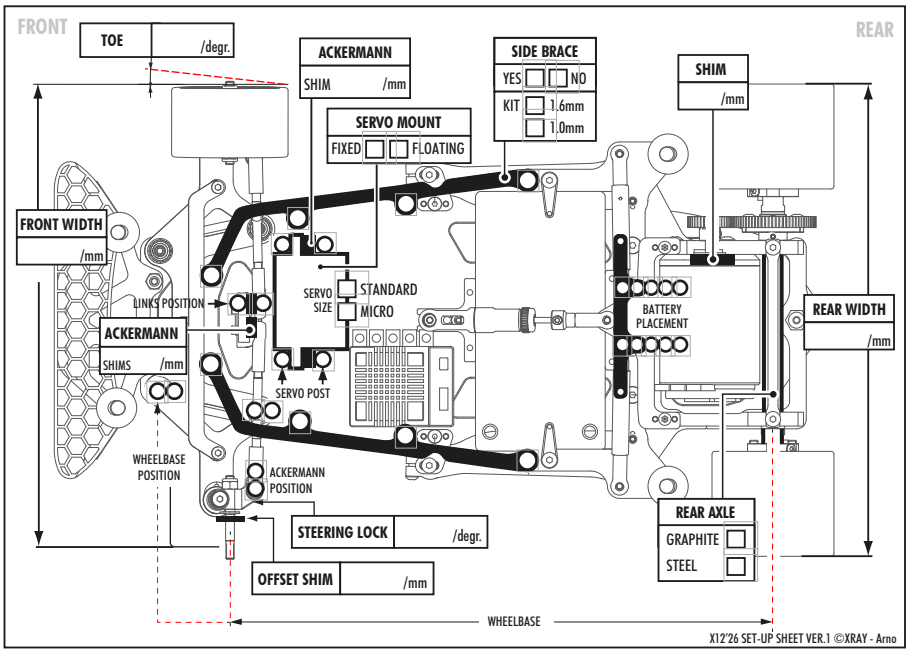

X12'26 SET-UP SHEET VER.1 ©XRAY - Arno