SET-UP SHEET

XRAY T4

RACE	
TRACK	ラジコン天国 名古屋
NAME	Shinnosuke Ogino
CITY / COUNTRY	OSAKA / JAPAN
CONTACT	

DATE	04/11/2012	TEMPERATURE / °F or °C	AIR	TRACK

QUALIFYING POSITION	BEST LAPTIME /sec	FINAL POSITION	RACE LENGTH /minutes

TRACK CONDITION	☐ CARPET	☐ ASPHALT
☐ TECHNICAL	☒ MIXED	☐ FAST
TRACTION	☐ LOW	☒ MEDIUM	☐ HIGH

FRONT	REAR
TRANSMISSION	
SOLID AXLE ☒ YES	BALL DIFFERENTIAL ☐ YES
SOLID ONE WAY DIFF. ☐ YES	
ONE WAY DIFFERENTIAL ☐ YES	
GEAR DIFFERENTIAL ☐ YES	GEAR DIFFERENTIAL ☒ YES
OIL	OIL 1000 /Gt

PINION / T	33	SPUR GEAR / T	113
FINAL DRIVE RATIO	6.51	ROLLOUT	0.00

FRONT		REAR
2.7	XRAY SPRINGS	2.3-2.6
35	OIL / CST	35
	LENGTH /mm	
	PRELOAD /mm	
0	REBOUND %	0
☐ YES ☒ NO	FOAM INSERTS	☐ YES ☒ NO
☐ YES ☒ NO	O-RING ON SHAFT	☐ YES ☒ NO

	PISTONS	
☐ 3 HOLES	1.0mm ☐	☐ 3 HOLES
☒ 4 HOLES	1.1mm ☒	☒ 4 HOLES
	1.2mm ☐	
	OTHERS	

1.3	ANTI-ROLL BAR THICKNESS/mm	1.2

SOREX 36	TIRES	SOREX 36
	INSERTS	
	ADDITIVE	
	ADDITIVE TIMING	

FRONT LEFT | FRONT RIGHT | TREATED AREA | REAR LEFT | REAR RIGHT

PR	WHEELS	PR
S ☐ M ☐ H ☒	HARDNESS	S ☐ M ☐ H ☒

MOTOR	17.5t HUNTER	TIMING	
ROTOR		ARMATURE	
ESC	Zenith	BATTERIES	ATLANTIS 6800
BODY	LTC-R	WING	std

● ☒ - APPLIED S-SOFT M-MEDIUM H-HARD

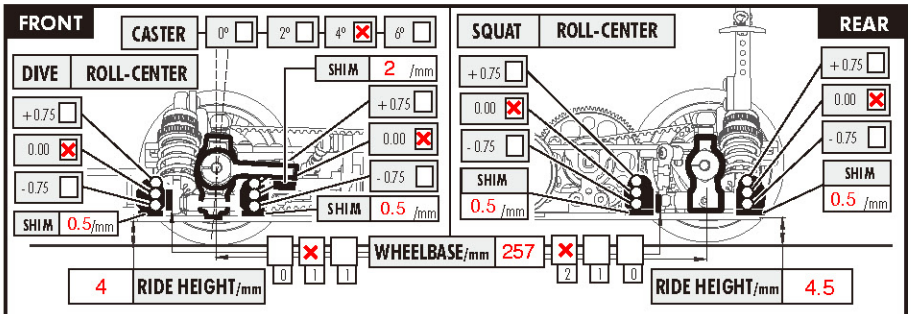

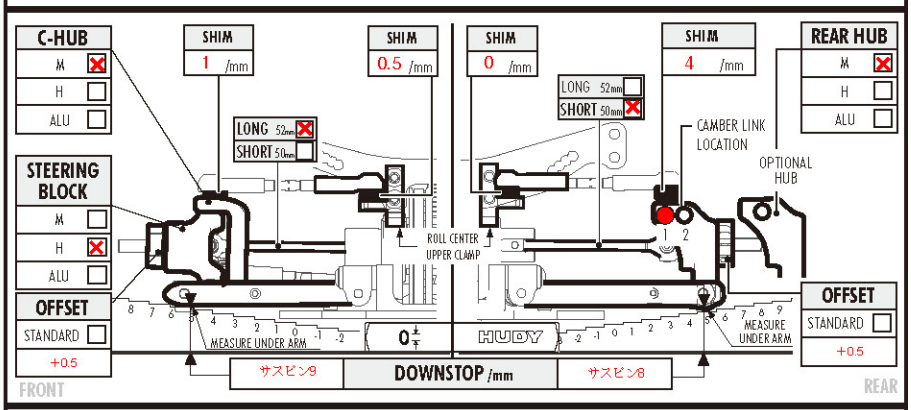

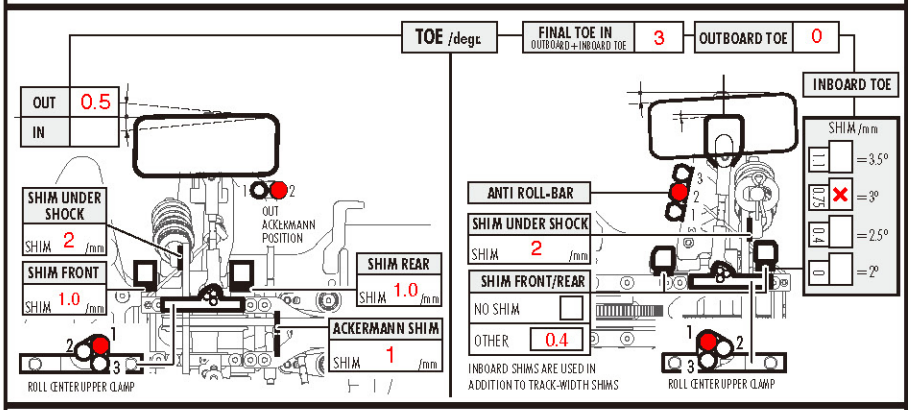

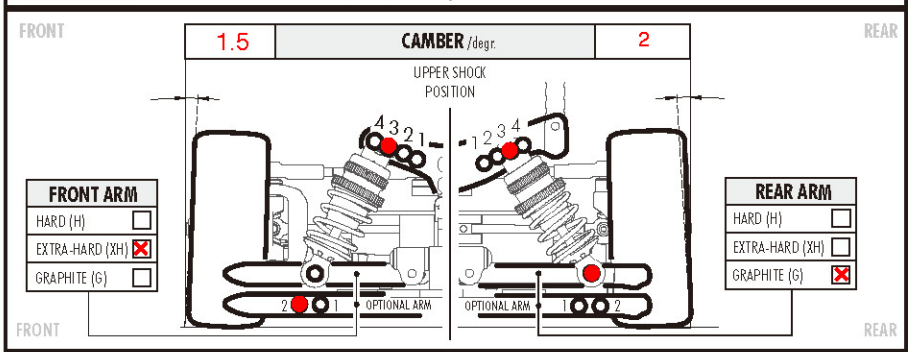

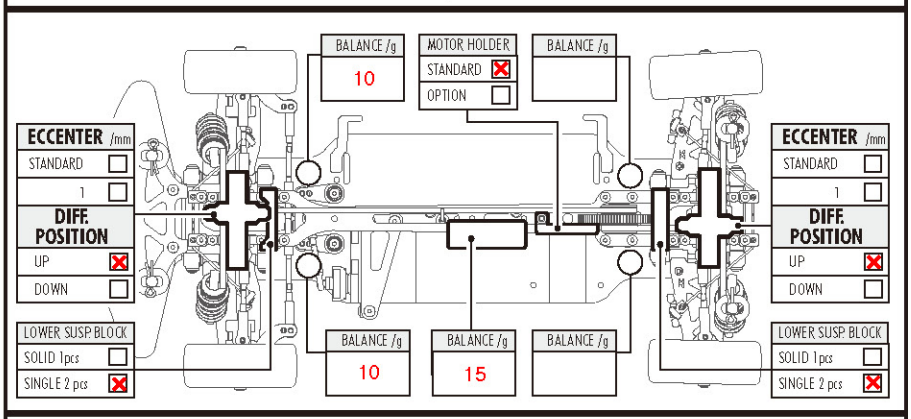

COMMENTS

ECS Front&Rear

reset all

VER. 6.0 © XRAY