SET-UP SHEET

XRAY T4

RACE	ETS Austria
TRACK	Sportzentrum Traiskirchen
NAME	Alexander Hagberg
CITY / COUNTRY	Traiskirchen / Austria
CONTACT	alexander.hagberg@gmail.com

DATE	TEMPERATURE / °F or °C	AIR	TRACK
17/06/2013		30	40

QUALIFYING POSITION	BEST LAPTIME /sec	FINAL POSITION	RACE LENGTH /minutes
6	14.7	4	5

TRACK CONDITION			
	☐ TECHNICAL	☒ MIXED	☐ CARPET / ☒ ASPHALT / ☐ FAST
TRACTION	☐ LOW	☒ MEDIUM	☐ HIGH

FRONT	REAR
TRANSMISSION	
SOLID AXLE ☐ YES	BALL DIFFERENTIAL ☐ YES
SOLID ONE WAY DIFF. ☐ YES	
ONE WAY DIFFERENTIAL ☐ YES	
GEAR DIFFERENTIAL ☐ YES	GEAR DIFFERENTIAL ☐ YES
OIL putty	OIL 5000 /Cst

PINION / T	26	SPUR GEAR / T	112
FINAL DRIVE RATIO	4.3076923076923	ROLLOUT	NaN

FRONT		REAR
2.5-2.8	XRAY SPRINGS	2.5-2.8
450	OIL / CST	500
	LENGTH /mm	
	PRELOAD /mm	
0	REBOUND %	0
☒ YES ☐ NO	FOAM INSERTS	☒ YES ☐ NO
☐ YES ☒ NO	O-RING ON SHAFT	☐ YES ☒ NO

	PISTONS	
☐ 3 HOLES	1.0mm	☐ 3 HOLES
☒ 4 HOLES	☒ 1.1mm	☒ 4 HOLES
	1.2mm	
	OTHERS	

1.4	ANTI-ROLL BAR THICKNESS/mm	1.2

Ride Rex 34	TIRES	
	INSERTS	
AME	ADDITIVE	
15	ADDITIVE TIMING	

FRONT LEFT | FRONT RIGHT | TREATED AREA | REAR LEFT | REAR RIGHT

S ☐ M ☐ H ☐	WHEELS / HARDNESS	S ☐ M ☐ H ☐

MOTOR	ORCA TX 4.5T	TIMING	10
ROTOR	12.5	ARMATURE	
ESC	ORCA VX	BATTERIES	ORCA INFINITE 6000 80C
BODY	LTC-R LW PF	WING	MR33

● ☒ - APPLIED S-SOFT M-MEDIUM H-HARD

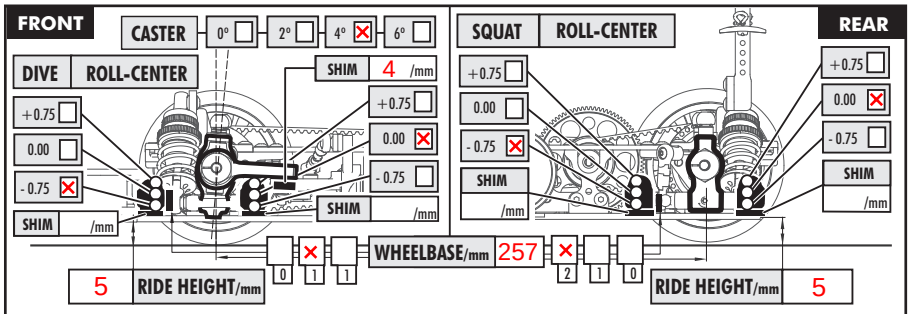

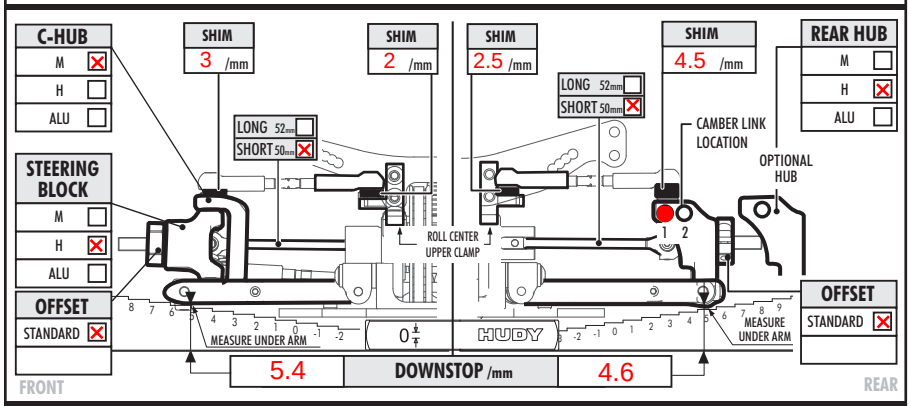

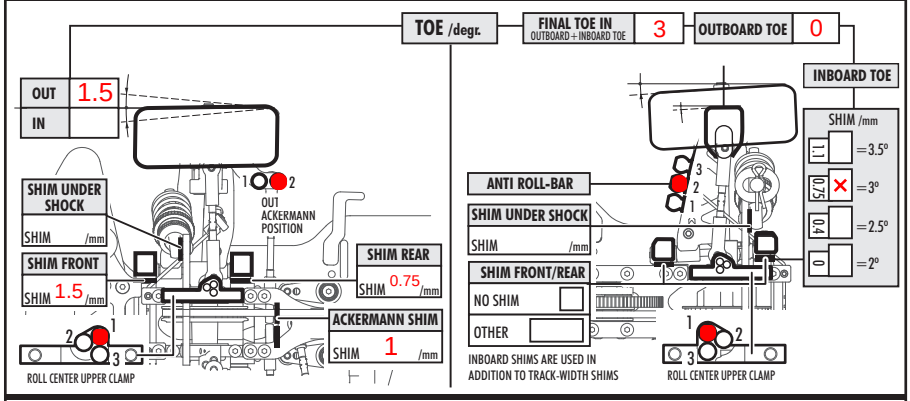

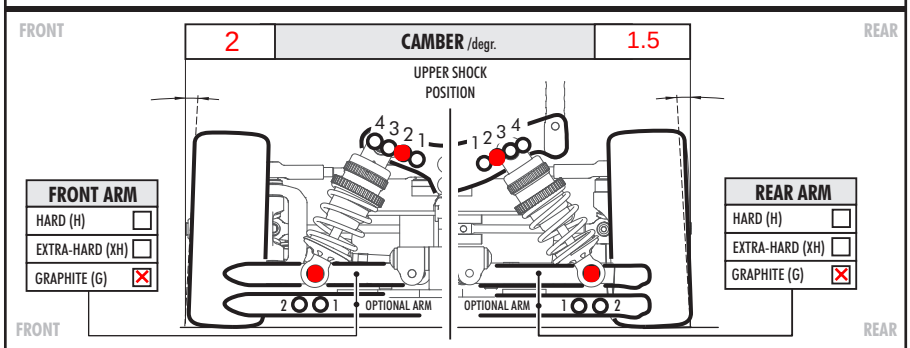

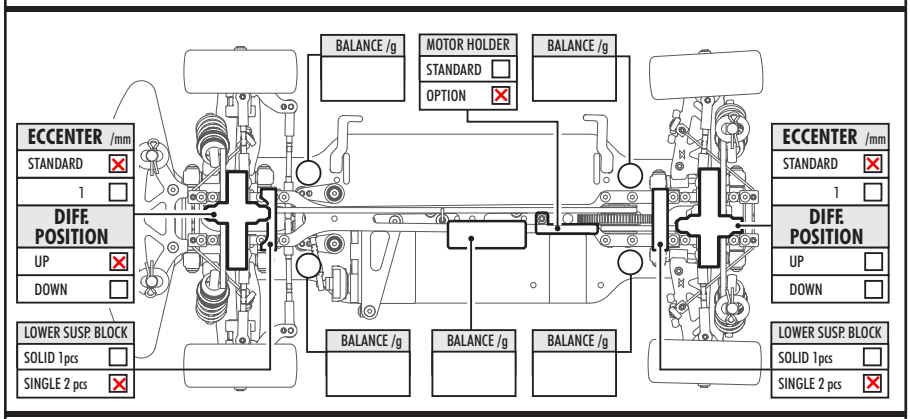

COMMENTS

HUDY alu servo horn

ECS front driveshafts