SET-UP SHEET

XRAY T3'12

RACE	2012 - French Nat Rnd 1
TRACK	Zillisheim
NAME	mathias.rascol
CITY / COUNTRY	Nantes / France
CONTACT	mathias.rascol@gmail.com

DATE	18/03/2012	TEMPERATURE / °F or °C	AIR	TRACK

QUALIFYING POSITION	BEST LAPTIME /sec	FINAL POSITION	RACE LENGTH /minutes
8	12'92	10	5

TRACK CONDITION			
	[X] TECHNICAL	[ ] CARPET	[ ] ASPHALT
		[ ] MIXED	[ ] FAST
TRACTION	[ ] LOW	[X] MEDIUM	[ ] HIGH

FRONT		REAR	
TRANSMISSION			
SOLID AXLE	[X] YES	BALL DIFFERENTIAL	[ ] YES
SOLID ONE WAY DIFF.	[ ] YES		
ONE WAY DIFFERENTIAL	[ ] YES		
GEAR DIFFERENTIAL	[ ] YES	GEAR DIFFERENTIAL	[X] YES
OIL		OIL	1000 /Cst

PINION / T	24	SPUR GEAR / T	114
FINAL DRIVE RATIO	4.75	ROLLOUT	NaN

FRONT		SHOCKS	REAR	
[X] ALU	[ ] PLASTIC		[X] ALU	[ ] PLASTIC
2.6		XRAY SPRINGS	2.4	
350		OIL / CST	350	
		LENGTH /mm		
		PRELOAD /mm		
10%		REBOUND %	10%	
[X] YES	[ ] NO	FOAM INSERTS	[X] YES	[ ] NO
[ ] YES	[X] NO	O-RING ON SHAFT	[ ] YES	[X] NO

○ OPENED
● CLOSED

HOLES IN PISTON

1.4	THICKNESS/mm	ANTI-ROLL BAR THICKNESS/mm	1.2

Ride 32	TIRES	Ride 32
	DIAMETER /mm	
	INSERTS	
2	ADDITIVE	2

FRONT LEFT | FRONT RIGHT | REAR LEFT | REAR RIGHT

TREATED AREA

	WHEELS	
S [ ] M [ ] H [ ]	HARDNESS	S [ ] M [ ] H [ ]

MOTOR	Nosrm Pure2 5.5	TIMING	
ROTOR	Std	ARMATURE	
ESC	Nosram ISTC v2	BATTERIES	Nosram 6200

BRUSHLESS			
PROGRAM 0	PUNCH 0	INITIAL BRAKE	AUTO BRAKE
BODY	Speed6	WING	MR33

● [X] - APPLIED S -SOFT M -MEDIUM H -HARD

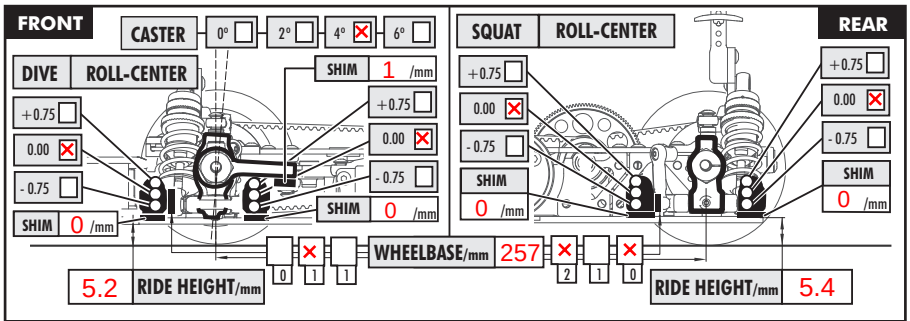

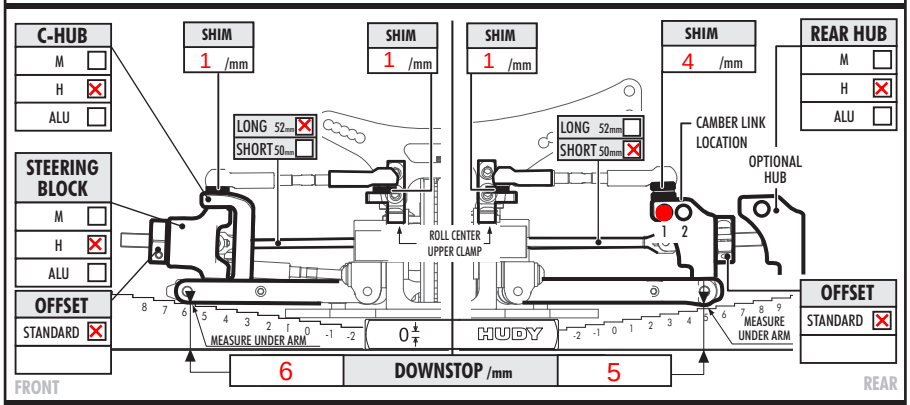

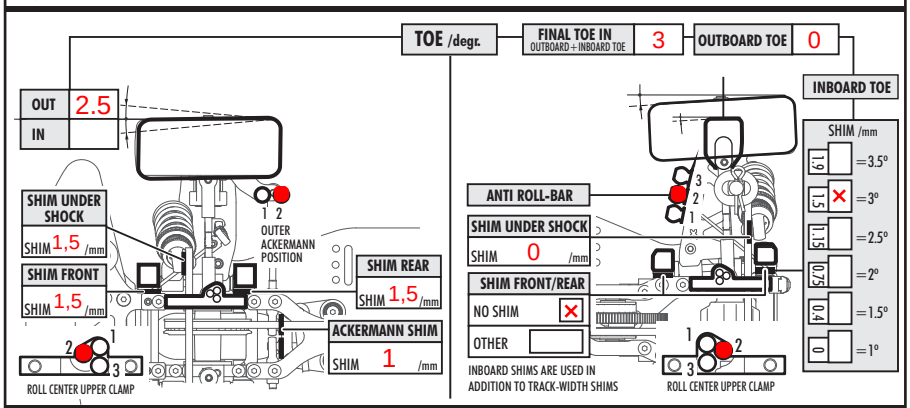

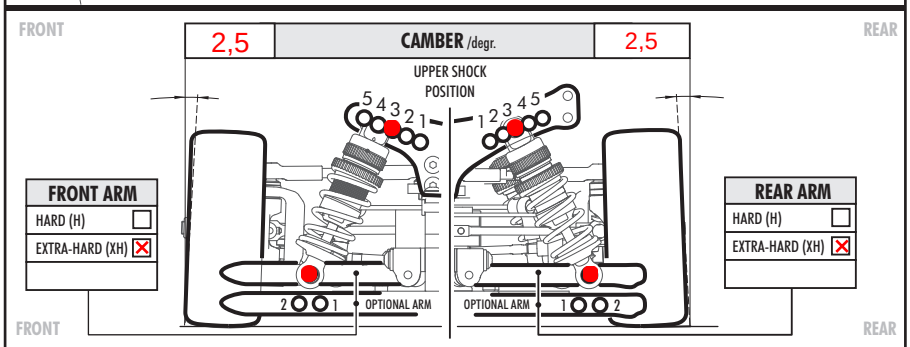

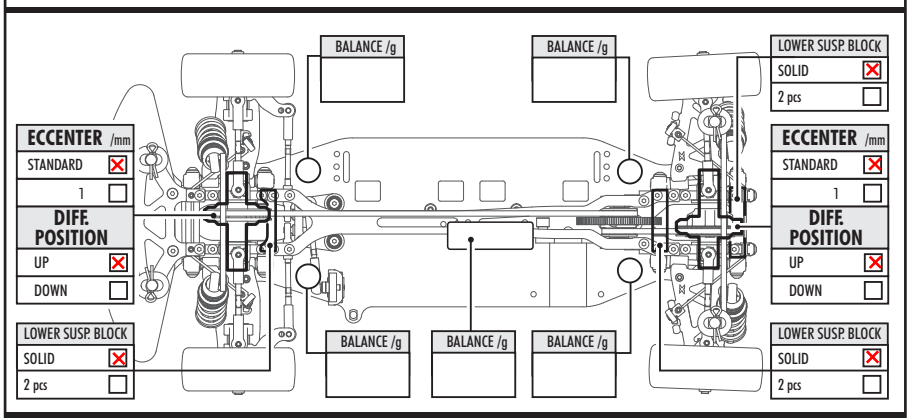

CA on outside front wheels
trie additive : 30min rear / 15 min front