SET-UP SHEET

XRAY T3'12

RACE	ETS Rnd1
TRACK	Mulheim Karlich
NAME	mathias.rascol
CITY / COUNTRY	Nantes — France
CONTACT	mathias.rascol@gmail.com

DATE	30/10/2011	TEMPERATURE / °F or °C	AIR	TRACK

QUALIFYING POSITION	BEST LAPTIME /sec	FINAL POSITION	RACE LENGTH /minutes
1	11,9	1	5

TRACK CONDITION			
	[X] TECHNICAL	[X] CARPET	[ ] ASPHALT
		[ ] MIXED	[ ] FAST
TRACTION	[ ] LOW	[X] MEDIUM	[ ] HIGH

FRONT	REAR
TRANSMISSION	
SOLID AXLE [X] YES	BALL DIFFERENTIAL [ ] YES
SOLID ONE WAY DIFF. [ ] YES	
ONE WAY DIFFERENTIAL [ ] YES	
GEAR DIFFERENTIAL [ ] YES	GEAR DIFFERENTIAL [X] YES
OIL	OIL 1000 /Cst

PINION / T	25	SPUR GEAR / T	114
FINAL DRIVE RATIO	4.56	ROLLOUT	NaN

FRONT		REAR
[X] ALU [ ] PLASTIC	SHOCKS	[X] ALU [ ] PLASTIC
3.0	XRAY SPRINGS	2.6
350	OIL / CST	350
	LENGTH /mm	
	PRELOAD /mm	
10%	REBOUND %	10%
[X] YES [ ] NO	FOAM INSERTS	[X] YES [ ] NO
[ ] YES [X] NO	O-RING ON SHAFT	[ ] YES [X] NO

○ OPENED
● CLOSED

HOLES IN PISTON

1.4	ANTI-ROLL BAR THICKNESS/mm	1.2

Ride 32	TIRES	Ride 32
	DIAMETER /mm	
	INSERTS	
CS HG	ADDITIVE	CS HG

FRONT LEFT | FRONT RIGHT | REAR LEFT | REAR RIGHT

TREATED AREA

	WHEELS	
S [ ] M [ ] H [ ]	HARDNESS	S [ ] M [ ] H [ ]

MOTOR	Nosram 5.0	TIMING	
ROTOR	Std	ARMATURE	
ESC	Nosram ISTC v2	BATTERIES	Nosram 6200

BRUSHLESS							
PROGRAM	0	PUNCH	0	INITIAL BRAKE		AUTO BRAKE	

BODY	Speed6	WING	MR33

● [X] - APPLIED S -SOFT M -MEDIUM H -HARD

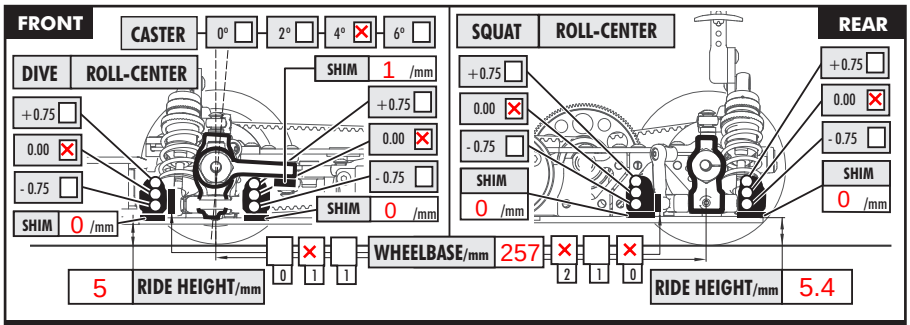

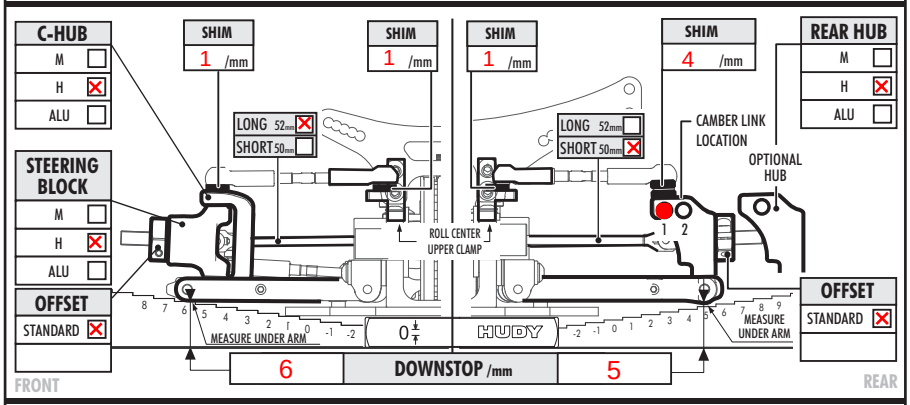

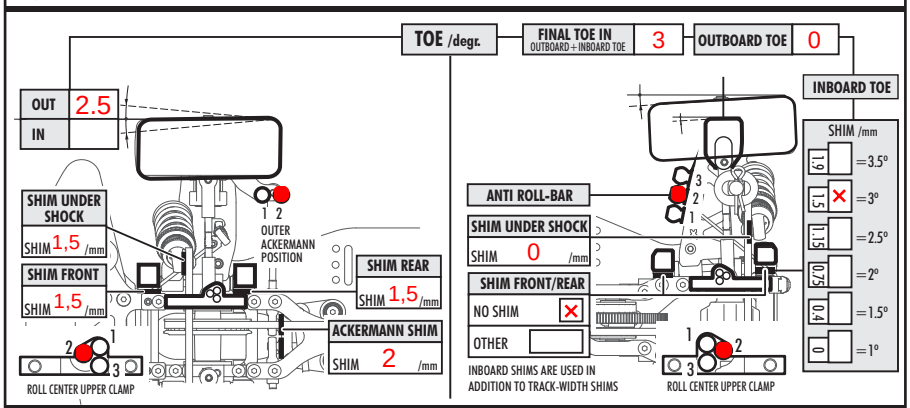

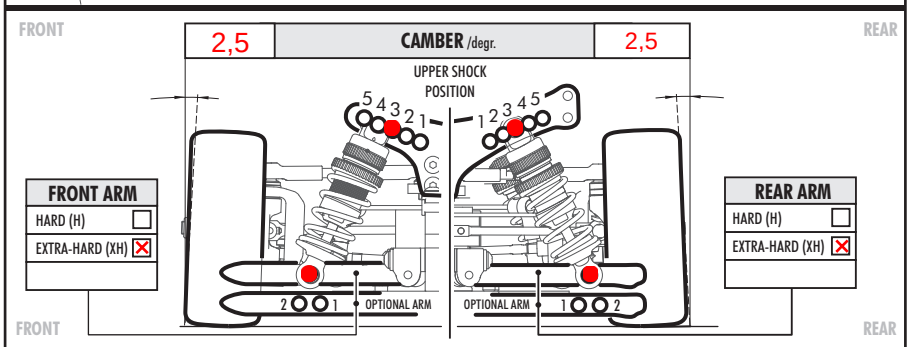

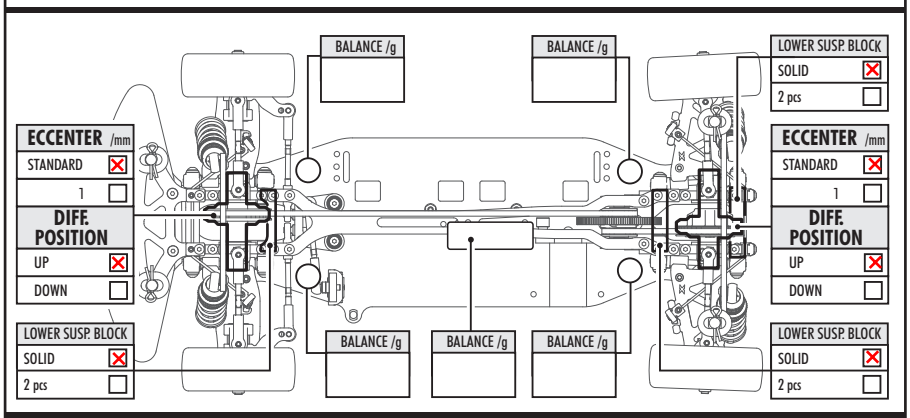

CA on outside front wheels
trie additive : 30min rear / 15 min front
note : front toe-out to prevent traction roll. Car easier to driver and same lap time. tried it for the last final

VER. 6.0 © XRAY