SET-UP SHEET

XRAY T3'12

RACE	Swiss Nationals '12 Rnd5
TRACK	Lostallo
NAME	Mario Rigert
CITY / COUNTRY	Luzern / Switzerland
CONTACT	

DATE	09/10/2012	TEMPERATURE / °F or °C	AIR	TRACK

QUALIFYING POSITION	BEST LAPTIME /sec	FINAL POSITION	RACE LENGTH /minutes
2	14.7	1	5

TRACK CONDITION			
	☐ CARPET	☒ ASPHALT	
☐ TECHNICAL	☒ MIXED	☐ FAST	
TRACTION	☐ LOW	☒ MEDIUM	☐ HIGH

FRONT | REAR

TRANSMISSION

SOLID AXLE	☒ YES	BALL DIFFERENTIAL	☐ YES
SOLID ONE WAY DIFF.	☐ YES		
ONE WAY DIFFERENTIAL	☐ YES		
GEAR DIFFERENTIAL	☐ YES	GEAR DIFFERENTIAL	☒ YES
OIL		OIL	1000 /Cst

PINION / T	21	SPUR GEAR / T	84
FINAL DRIVE RATIO	4	ROLLOUT	NaN

FRONT | REAR

☒ ALU	☐ PLASTIC	SHOCKS	☒ ALU ☐ PLASTIC
2.6	XRAY SPRINGS	2.6	
400	OIL / CST	400	
	LENGTH /mm		
	PRELOAD /mm		
25%	REBOUND %	25%	
☐ YES ☒ NO	FOAM INSERTS	☐ YES ☒ NO	
☐ YES ☒ NO	O-RING ON SHAFT	☐ YES ☒ NO	

○ OPENED
● CLOSED

HOLES IN PISTON

1.3	ANTI-ROLL BAR THICKNESS/mm	1.3

Ride 36	TIRES	Ride 36
	DIAMETER /mm	
	INSERTS	
	ADDITIVE	

FRONT LEFT | FRONT RIGHT | TREATED AREA | REAR LEFT | REAR RIGHT

	WHEELS	
S ☐ M ☐ H ☐	HARDNESS	S ☐ M ☐ H ☐

MOTOR	Nosram 5.0	TIMING	
ROTOR		ARMATURE	
ESC		BATTERIES	

BRUSHLESS			
PROGRAM	PUNCH	INITIAL BRAKE	AUTO BRAKE

BODY	Mazda 6	WING	orig

● ☒ - APPLIED S -SOFT M -MEDIUM H -HARD

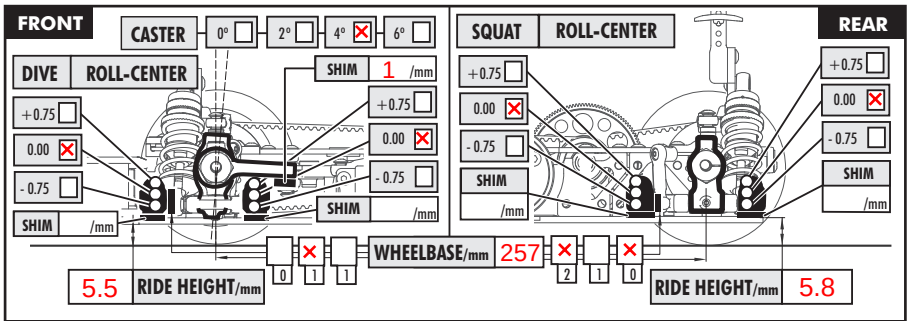

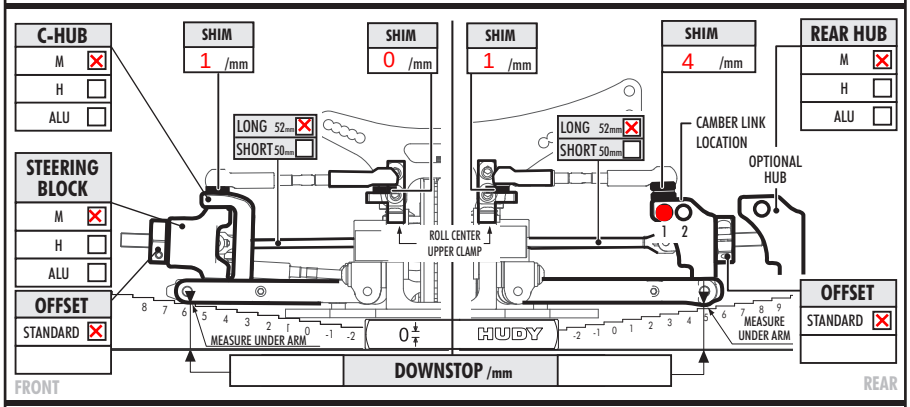

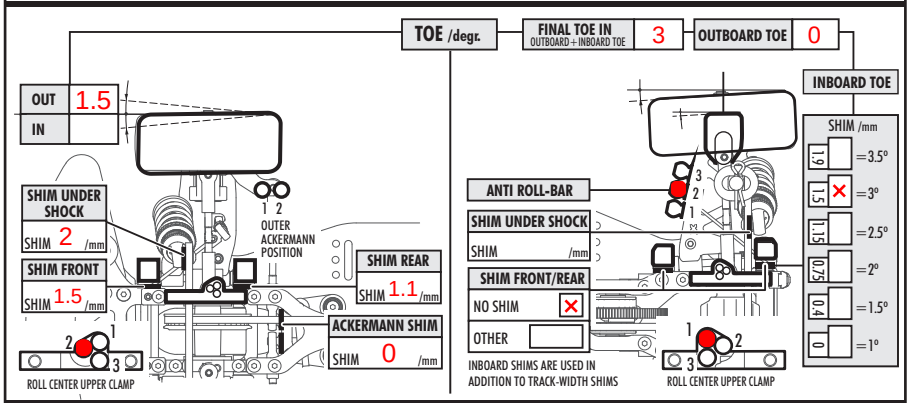

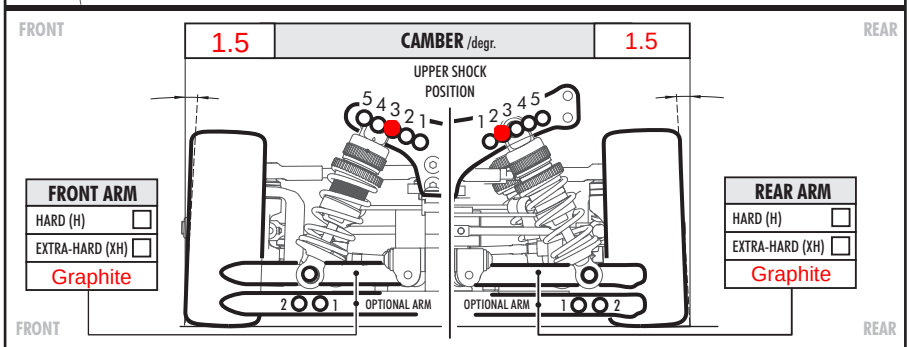

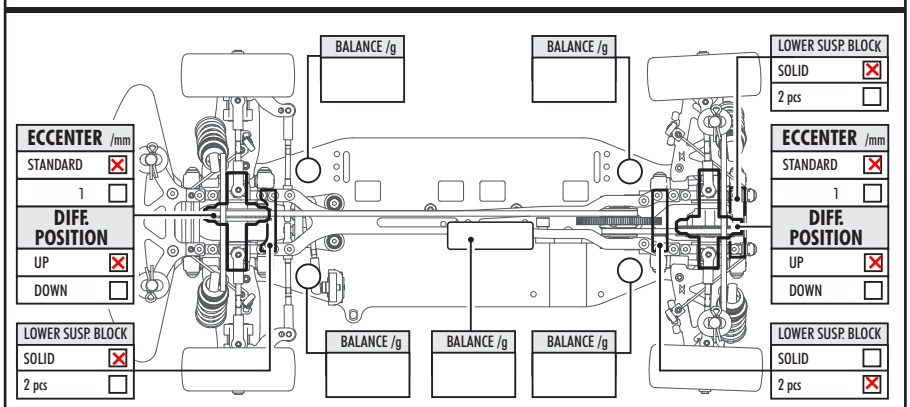

droop front 2mm uptravel, rear 4mm uptravel