SET-UP SHEET

XRAY T3'12

RACE	CORRC Club Race
TRACK	CORRC
NAME	artwork
CITY / COUNTRY	LAKEWOOD USA
CONTACT	

DATE	30/12/2011	TEMPERATURE / °F or °C	AIR	TRACK

QUALIFYING POSITION	BEST LAPTIME /sec	FINAL POSITION	RACE LENGTH /minutes
1	10.538	1	5:00

TRACK CONDITION			
		[X] CARPET	[ ] ASPHALT
	[ ] TECHNICAL	[X] MIXED	[ ] FAST
TRACTION	[ ] LOW	[X] MEDIUM	[ ] HIGH

FRONT	REAR
TRANSMISSION	
SOLID AXLE [X] YES	BALL DIFFERENTIAL [ ] YES
SOLID ONE WAY DIFF. [ ] YES	
ONE WAY DIFFERENTIAL [ ] YES	
GEAR DIFFERENTIAL [ ] YES	GEAR DIFFERENTIAL [X] YES
OIL	OIL 1000 /Cst

PINION / T	48	SPUR GEAR / T	100
FINAL DRIVE RATIO	2.0833333333333	ROLLOUT	NaN

FRONT		REAR	
[ ] ALU	[X] PLASTIC	SHOCKS	[ ] ALU [X] PLASTIC
3.0		XRAY SPRINGS	2.6
400		OIL / CST	400
		LENGTH /mm	
		PRELOAD /mm	
0		REBOUND %	0
[ ] YES	[X] NO	FOAM INSERTS	[ ] YES [X] NO
[ ] YES	[X] NO	O-RING ON SHAFT	[ ] YES [X] NO

○ OPENED
● CLOSED

HOLES IN PISTON

1.4	ANTI-ROLL BAR THICKNESS/mm	THICKNESS/mm 1.2

Solaris M	TIRES	Solaris M
	DIAMETER /mm	
	INSERTS	
SXT V3	ADDITIVE	SXT V3

FRONT LEFT | FRONT RIGHT | REAR LEFT | REAR RIGHT

TREATED AREA

	WHEELS	
S [ ] M [ ] H [ ]	HARDNESS	S [ ] M [ ] H [ ]

MOTOR	RevTek	TIMING	90% Full
ROTOR	STD	ARMATURE	STD
ESC	Tekin RS	BATTERIES	Reedy 60C

BRUSHLESS			
PROGRAM	PUNCH	INITIAL BRAKE	AUTO BRAKE

BODY	LTC-R	WING	STD
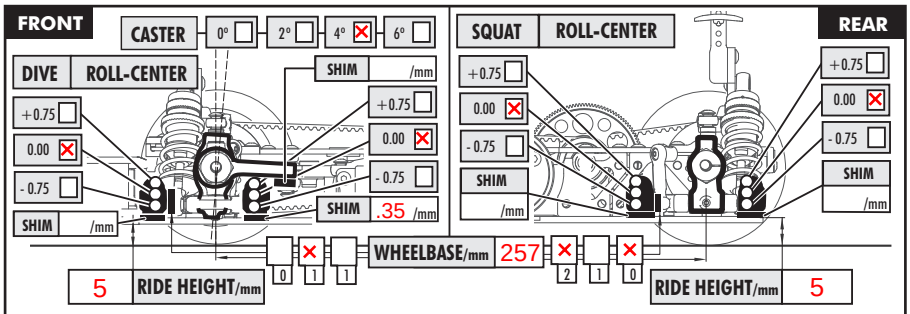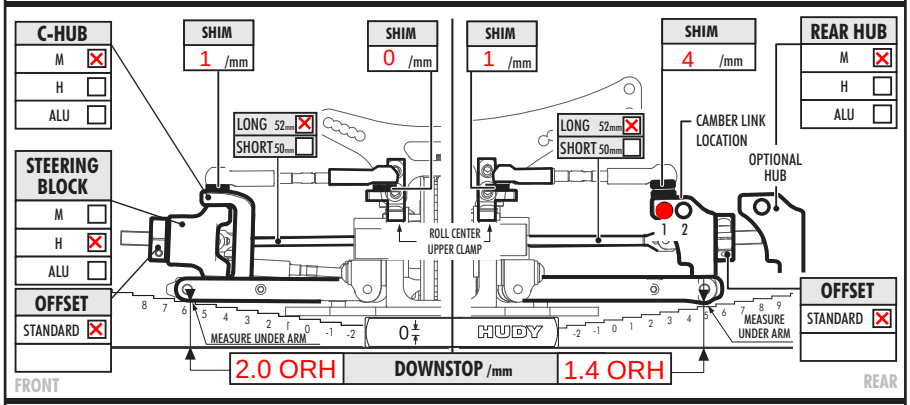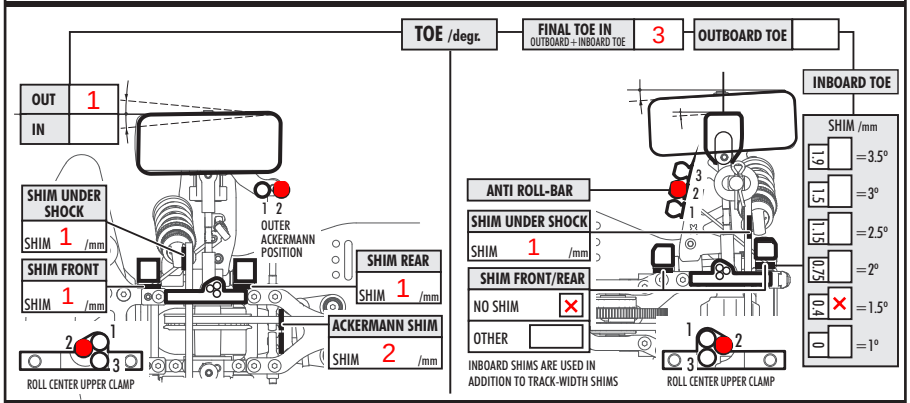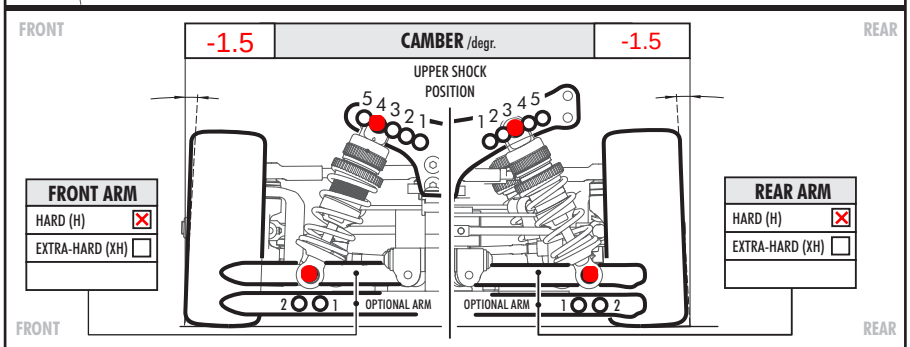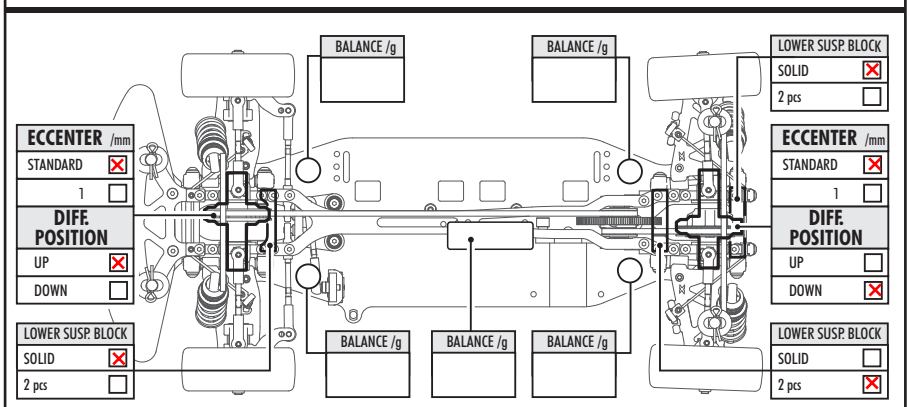
● [X] - APPLIED S -SOFT M -MEDIUM H -HARD