SET-UP SHEET

XRAY T2 '08

RACE	Roar carpet nationals
TRACK	Strongsville oh
NAME	Paul LeMieux
CITY / COUNTRY	milwaukee / USA
CONTACT	customworkspl@aol.com
DATE	26/03/2009
TEMPERATURE / °F or °C	
AIR	
TRACK	

QUALIFYING POSITION	BEST LAPTIME / sec	FINAL POSITION	RACE LENGTH / minutes
1	9.5	1	6

TRACK CONDITION			
	[X] TECHNICAL	[ ] MIXED	[ ] FAST
		[ ] CARPET	[ ] ASPHALT
TRACTION	[ ] LOW	[ ] MEDIUM	[X] HIGH

TRANSMISSION

FRONT	REAR
FRONT PULLEY: 34T	REAR PULLEY:

DIFF.

FRONT	REAR
[ ] LOOSE [ ] [ ] [X] MEDIUM [ ] TIGHT	[ ] LOOSE [ ] [ ] [ ] [X] MEDIUM [ ] TIGHT

ONE WAY DIFFERENTIAL	[ ] YES
SOLID ONE WAY DIFF.	[ ] YES
SOLID AXLE	[ ] YES

MIDDLE ONE WAY PULLEY: FIXED [X] ONE-WAY [ ]

PINION / T	24	SPUR GEAR / T	118
FINAL DRIVE RATIO	8.358	ROLLOUT	21.414

SHOCKS

FRONT	REAR
[ ] ALU [X] PLASTIC	[ ] ALU [X] PLASTIC

XRAY SPRINGS

#308393	Super Soft	[ ]	YELLOW	[ ]	(D=1.4) 14 lb
#308384		[ ]	BLUE-GREEN	[ ]	(D=1.5) 15 lb
#308394	Soft	[ ]	WHITE	[X]	(D=1.5) 17.5 lb
#308385		[ ]	LIGHT-BLUE	[ ]	(D=1.6) 20 lb
#308395	Soft Medium	[ ]	BLUE	[ ]	(D=1.6) 22.5 lb
#308386		[ ]	DARK-BLUE	[ ]	(D=1.7) 25 lb
#308396	Medium	[ ]	VIOLET	[ ]	(D=1.7) 28 lb
#308387		[X]	LIGHT-PURPLE	[ ]	(D=1.8) 30 lb
#308397	Medium Hard	[ ]	PURPLE	[ ]	(D=1.8) 33 lb
#308388		[ ]	LIGHT-RED	[ ]	(D=1.9) 35 lb
#308398	Hard	[ ]	RED	[ ]	(D=1.9) 38 lb

#308373	[ ]	C 2.2	[ ]
#308374	[ ]	C 2.4	[ ]
#308375	[ ]	C 2.6	[ ]
#308376	[ ]	C 2.8	[ ]
#308377	[ ]	C 3.0	[ ]
#308378	[ ]	C 3.2	[ ]
#308379	[ ]	C 3.4	[ ]

	OTHER SPRING	
300	OIL / CST	500
	LENGTH / mm	
	PRELOAD / mm	
	REBOUND %	
[ ] YES [X] NO	FOAM INSERTS	[ ] YES [X] NO
[ ] YES [X] NO	O-RING ON SHAFT	[ ] YES [X] NO

[ ] OPENED
[X] CLOSED

HOLES IN PISTON

1.5	ANTI-ROLL BAR	
THICKNESS / mm		THICKNESS / mm

jaco majenta	TIRES	jaco majenta
57	DIAMETER / mm	57
	INSERTS	
	ADDITIVE	

FRONT LEFT / FRONT RIGHT — TREATED AREA — REAR LEFT / REAR RIGHT

	WHEELS	
[ ] S [ ] M [ ] H	HARDNESS	[ ] S [ ] M [ ] H

MOTOR	trinity pulse 4.5	ARMATURE	
		+ SPRING -	
		+ BRUSH COMP. -	

ESC	lrp sphere tc spec	BATTERIES	trinity IP Lipo

BRUSHLESS	PROGRAM	PUNCH	2	INITIAL BRAKE	2	AUTO BRAKE	2

BODY	protoform R9F	WING	stk back

● [X] - APPLIED S -SOFT M -MEDIUM H -HARD

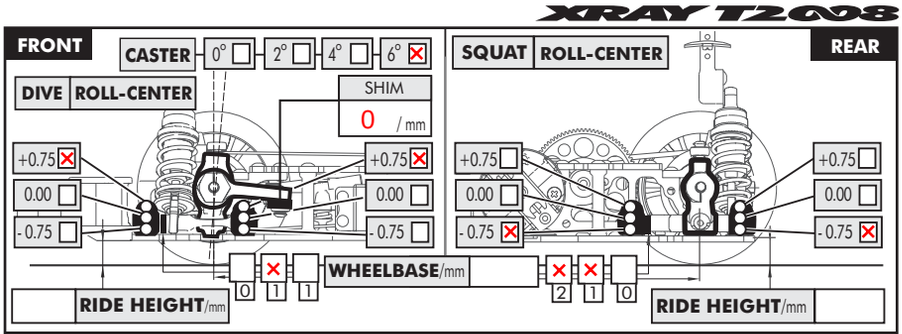

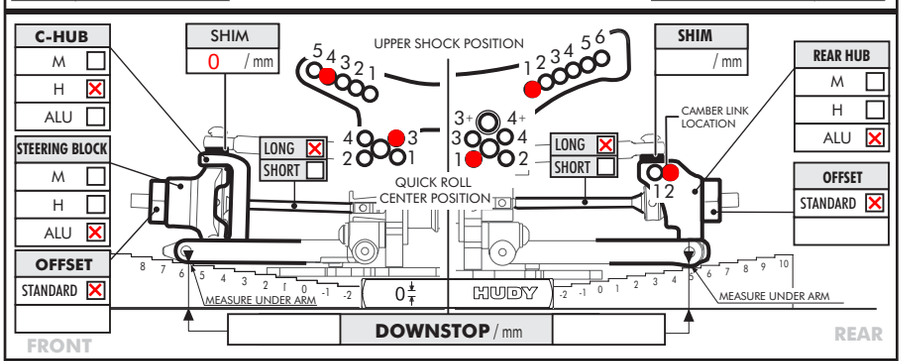

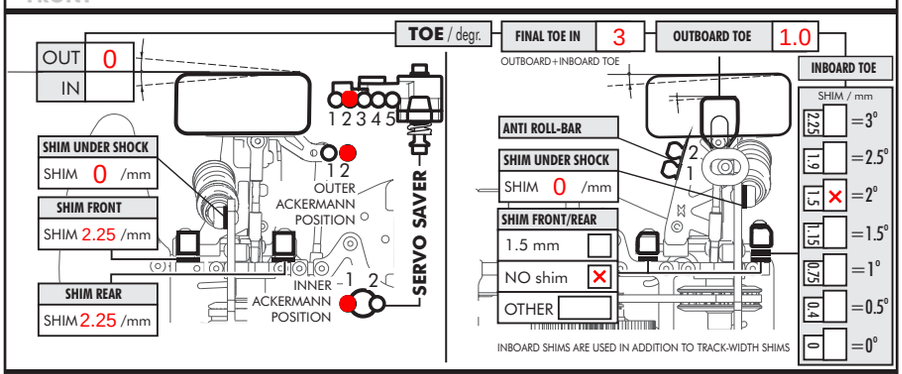

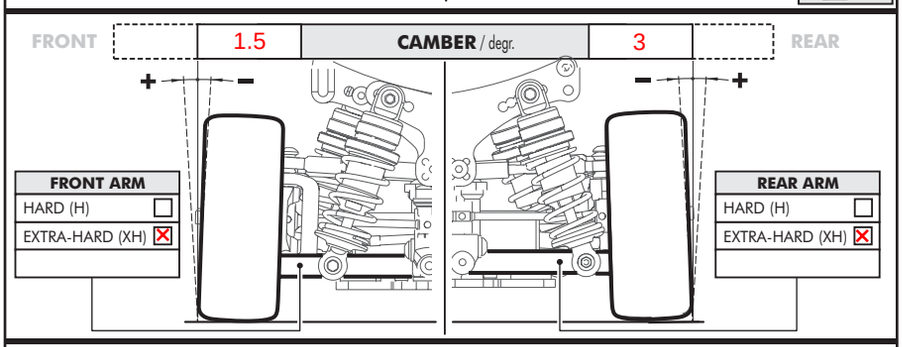

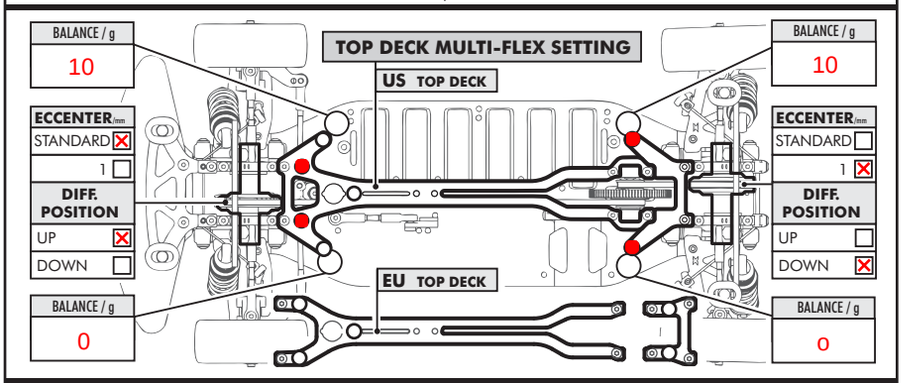

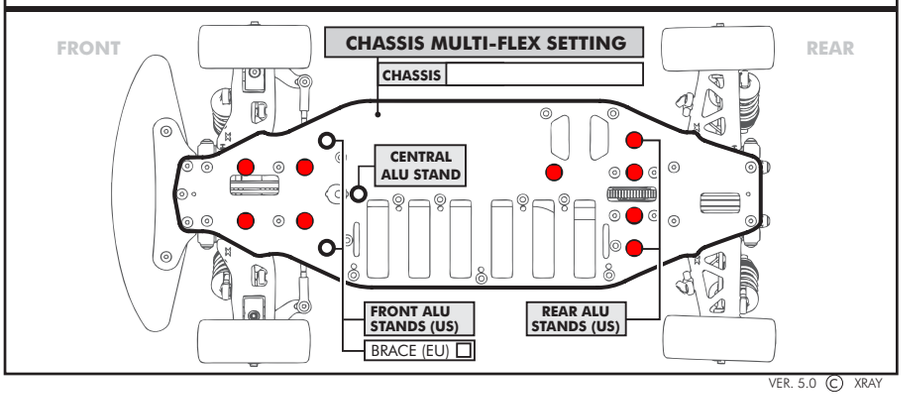

VER. 5.0 © XRAY