SET-UP SHEET

XRAY XII

RACE	MSEC race 5
TRACK	Örebro not permanent track

NAME	MickeB	
CITY / COUNTRY	Sollentuna	Sweden
CONTACT		

DATE	01/02/2010	
TEMPERATURE/F or °C	AIR	TRACK

QUALIFYING POSITION	BEST LAPTIME / sec	FINAL POSITION	RACE LENGTH / minutes
4	11.460	3	8

TRACK CONDITION		
[X] CARPET	[ ] ASPHALT	
[ ] TECHNICAL	[X] MIXED	[ ] FAST

TRACTION		
[ ] LOW	[X] MEDIUM	[ ] HIGH

CENTER SHOCK ABSORBER					
SPRING	std	OIL / cSt	450	REBOUND %	0

SIDE SHOCK ABSORBER	
OIL / cSt	350

FRONT		REAR
Jaco dbl pink	TIRES	Jaco grey
42,5	DIAMETER/mm	45.5
CS	ADDITIVE	CS
10	ADDITIVE timing	1hr

FRONT LEFT | FRONT RIGHT | ADDITIVE TREATED AREA | REAR LEFT | REAR RIGHT

TRANSMISSION
DIFF SETTING
[ ] LOOSE [ ] [ ] MEDIUM [ ] TIGHT [ ]

PINION / T	41	SPUR GEAR/T	79
FINAL DRIVE RATIO	1.9268292682927	ROLLOUT	74.147721518987

BRUSHED MOTOR	
BRAND	
ARMATURE	

BRUSHLESS MOTOR	
BRAND	Novak Ballistic
TURN	13.5 spec
ROTOR	std
TIMING	std

ESC	Advanced Black Dimond			
ESC SETTING	PROGRAM	5	PUNCH	
	INITIAL BRAKE		AUTO BRAKE	
BATTERIES	Thunder power 5000 40C			
BODY	Protoform Speed 12			

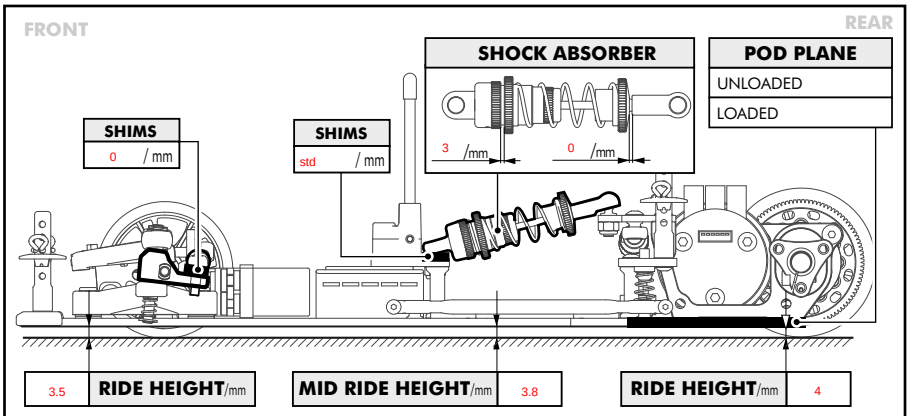

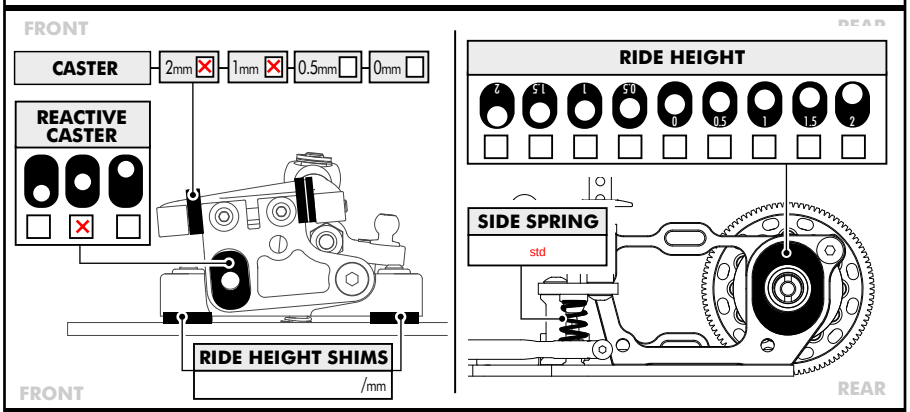

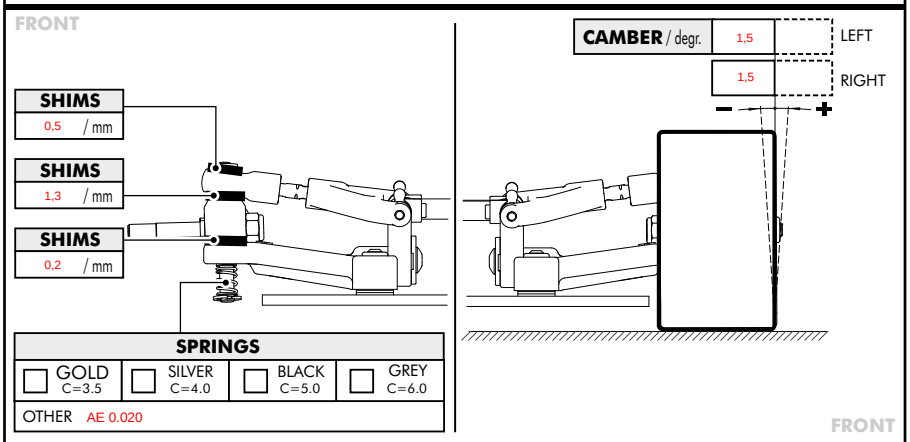

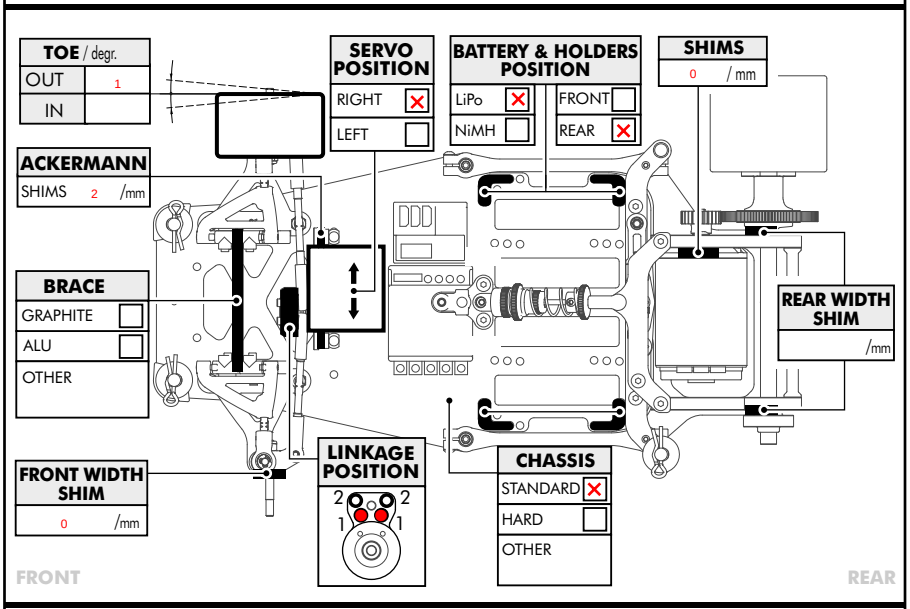

COMMENTS

Rear width of car 171mm

Best lap time of the race, qualified to poorley to make a bid for 1st place but the car was fast and easy to drive. And there are stiull improvments to make of the setup!!