SET-UP SHEET

XRAY T3'12

RACE	Rug Racers
TRACK	Flowing fast layout
NAME	Damian Giddins
CITY / COUNTRY	UK
CONTACT	skiddins@hotmail.com

DATE	TEMPERATURE / °F or °C	AIR	TRACK
10/2/12		2	3

QUALIFYING POSITION	BEST LAPTIME /sec	FINAL POSITION	RACE LENGTH /minutes
19/	11.41	9	5

TRACK CONDITION			
	[x] CARPET	[ ] ASPHALT	
[ ] TECHNICAL	[ ] MIXED	[x] FAST	
TRACTION	[ ] LOW	[x] MEDIUM	[ ] HIGH

FRONT	REAR
TRANSMISSION	
SOLID AXLE [x] YES	BALL DIFFERENTIAL [ ] YES
SOLID ONE WAY DIFF. [ ] YES	
ONE WAY DIFFERENTIAL [ ] YES	
GEAR DIFFERENTIAL [ ] YES	GEAR DIFFERENTIAL [x] YES
OIL	OIL 700 /Cst

PINION / T	22	SPUR GEAR / T	86
FINAL DRIVE RATIO	7.427272727272727	ROLLOUT	0.00

FRONT		REAR
[x] ALU [ ] PLASTIC	SHOCKS	[x] ALU [ ] PLASTIC
2.8	XRAY SPRINGS	2.6
450	OIL / CST	450
	LENGTH /mm	
	PRELOAD /mm	
20	REBOUND %	20
[x] YES [ ] NO	FOAM INSERTS	[x] YES [ ] NO
[ ] YES [x] NO	O-RING ON SHAFT	[ ] YES [x] NO

○ OPENED
● CLOSED

HOLES IN PISTON

1.4	ANTI-ROLL BAR THICKNESS/mm	THICKNESS/mm 1.2

Sweep 32 PP	TIRES	Sweep 32 PP
	DIAMETER /mm	
Pink (Pre-built)	INSERTS	Pink (Pre-built)
Nosram Carpet	ADDITIVE	Nosram Carpet

FRONT LEFT | FRONT RIGHT | TREATED AREA | REAR LEFT | REAR RIGHT

	WHEELS	
S [ ] M [ ] H [ ]	HARDNESS	S [ ] M [ ] H [ ]

MOTOR	Reedy Sonic 13.5	TIMING	3 notches
ROTOR	Std	ARMATURE	
ESC	Black Diamond	BATTERIES	Thunder Power

BRUSHLESS			
PROGRAM	PUNCH 5	INITIAL BRAKE	AUTO BRAKE
BODY	East Coast Bodies	WING	Std

● [x] - APPLIED S -SOFT M -MEDIUM H -HARD

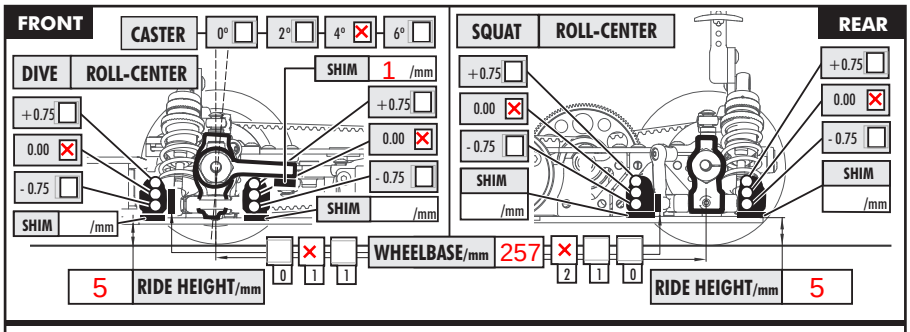

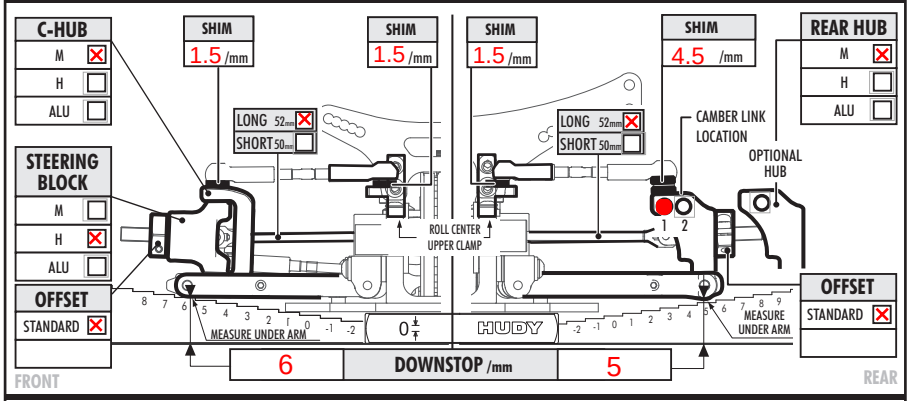

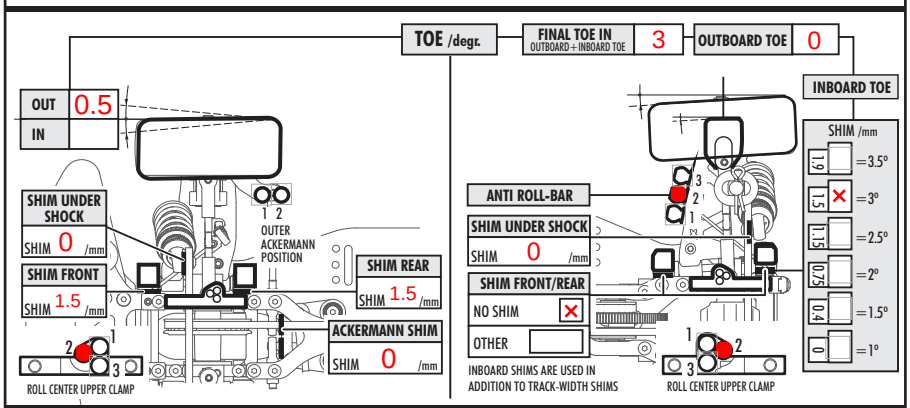

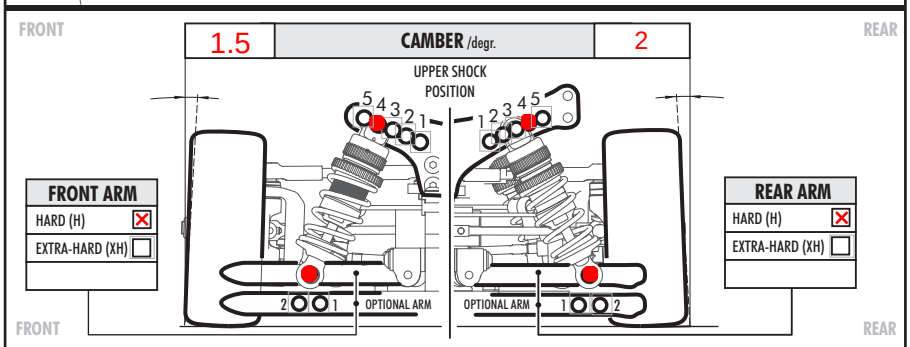

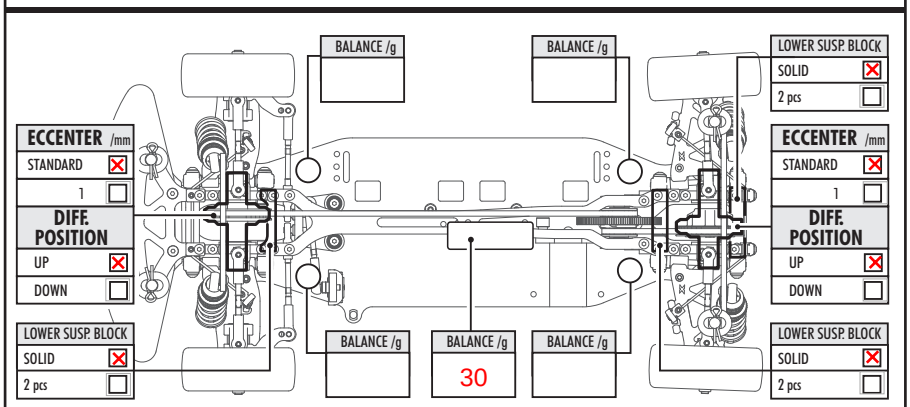

The best setup yet at Rug Racers
Shorter rear links made the car too twitchy and unstable, surprisingly PF LTC-R body (17g heavier) was too lazy and gave slower laps.

The extra 0.5mm shims on the rear upper link (inner and outer) made the car more stable through the chicane but without loosing any rear grip.
Reduced bump steer shims and extra 0.5mm on front upper link calmed down the mid corner steering.

Initial Throttle 15%, mid timing 3000rpm, 45deg, high timing 10000, 50deg. 200ms delay
Was missing 21t pinion so couldn't test lower gearing, motor temps were around 74degC and ESC never went above 42degC -

Perhaps increasing the ESC timing a bit more with lower gearing might help but be careful of motor temps!

I actually use original T3'11 shock towers so I have adjusted the shock location as if I was running the T3'12 towers
New Side Piece spool alloy outdrives.
Best lap in 13.5 - 10.77 - Ricky Copsey
3x1.1mm pistons

reset all

VER. 6.0 © XRAY