SET-UP SHEET — XRAY T3'12

RACE	Newbury Friday Night
TRACK	Layout A
NAME	Damian Giddins
CITY / COUNTRY	UK
CONTACT	skiddins@hotmail.com

DATE	TEMPERATURE / °F or °C	AIR	TRACK
4/5/12		10	10

QUALIFYING POSITION	BEST LAPTIME /sec	FINAL POSITION	RACE LENGTH /minutes
5/14	11.32	6/14	5

TRACK CONDITION			
	TECHNICAL	[X] CARPET	ASPHALT
		[X] MIXED	FAST
TRACTION	LOW	[X] MEDIUM	HIGH

TRANSMISSION

FRONT		REAR	
SOLID AXLE	[X] YES	BALL DIFFERENTIAL	YES
SOLID ONE WAY DIFF.	YES		
ONE WAY DIFFERENTIAL	YES		
GEAR DIFFERENTIAL	YES	GEAR DIFFERENTIAL	[X] YES
OIL		OIL	2000 /Cst

PINION / T	19	SPUR GEAR / T	82
FINAL DRIVE RATIO	8.2	ROLLOUT	0.00

FRONT		SHOCKS	REAR	
[X] ALU	PLASTIC		[X] ALU	PLASTIC
2.8		XRAY SPRINGS	2.6	
450		OIL / CST	450	
		LENGTH /mm		
		PRELOAD /mm		
10		REBOUND %	10	
[X] YES	NO	FOAM INSERTS	[X] YES	NO
YES	[X] NO	O-RING ON SHAFT	YES	[X] NO

○ OPENED
● CLOSED

HOLES IN PISTON

1.4	THICKNESS/mm	ANTI-ROLL BAR	THICKNESS/mm 1.2

Sorex 28JB	TIRES	Sorex 28JB
	DIAMETER /mm	
Blue (Pre-built)	INSERTS	Blue (Pre-built)
Nosram Carpet	ADDITIVE	Nosram Carpet

FRONT LEFT | FRONT RIGHT | TREATED AREA | REAR LEFT | REAR RIGHT

	WHEELS	
S M H	HARDNESS	S M H

MOTOR	Thunder Power 13.5	TIMING	25deg
ROTOR	Torque (Blue)	ARMATURE	
ESC	Black Diamond	BATTERIES	Thunder Power

BRUSHLESS			
PROGRAM	PUNCH 5	INITIAL BRAKE 30%	AUTO BRAKE Drag
BODY	East Coast Bodies Speed6 09	WING	Std

● [X] - APPLIED S -SOFT M -MEDIUM H -HARD

FRONT / REAR

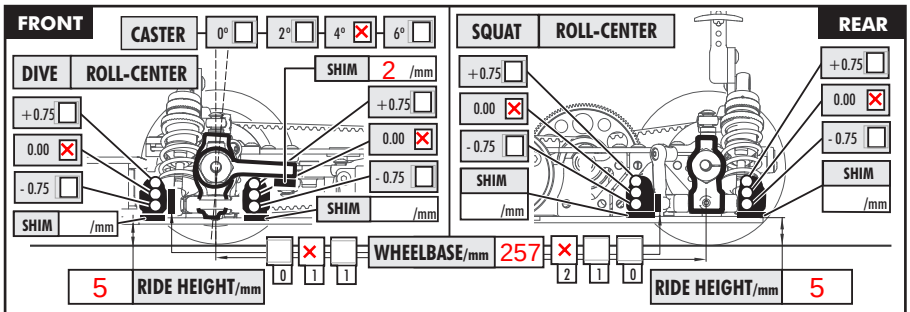

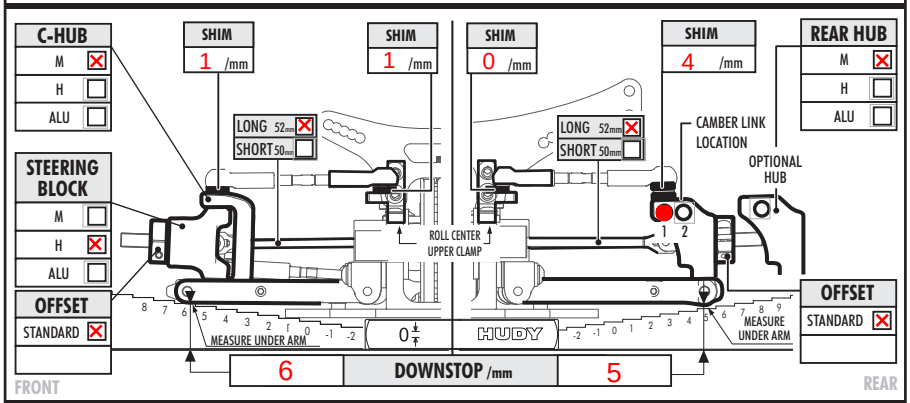

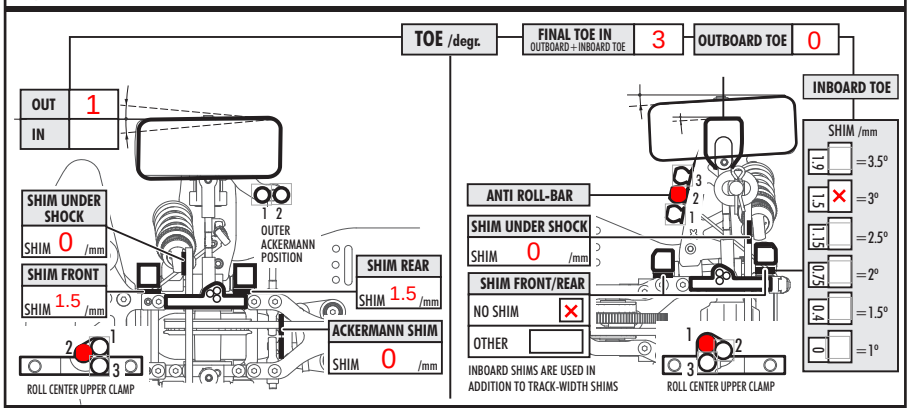

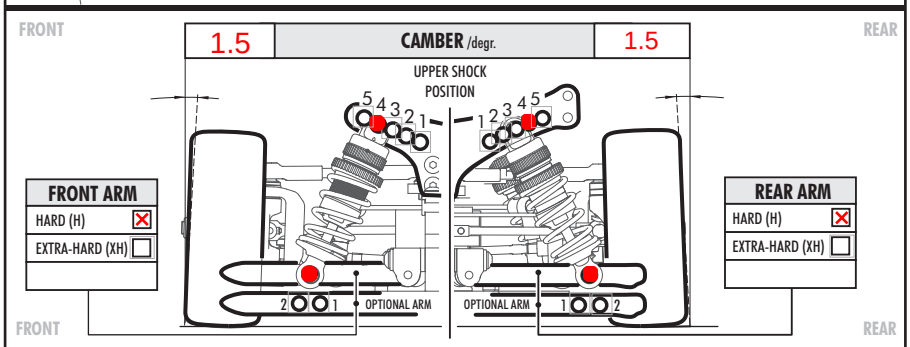

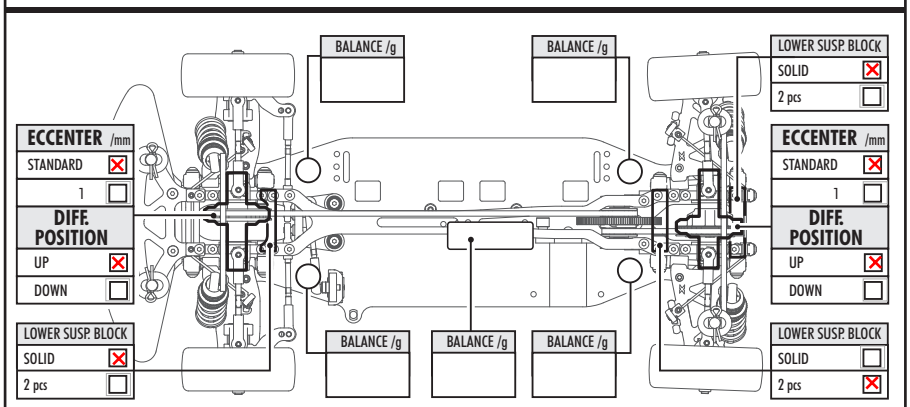

3x1.1mm pistons.
Hagberg rear pivot block mod (http://hagberg.blogs.se/2012/01/18/rear-suspension-modification-12479898/) which narrows the rear track by 1mm each side, rear toe remains as indicated but not using those shims.

Perhaps try 1mm on the inner upper camber link to help stop the rerar stepping out mid corner.
Speed was not an issue, as fast as anyone else down the straight.

Initial Throttle 15%, mid timing 7000rpm, 45deg, high timing 15000, 50deg. 200ms delay
Drag Brake improved laptimes by 0.1s per lap.
Motor temps were around 55degC. Went up to 58degC when I tried 100ms delay (lap times no faster)

I actually use original T3'11 shock towers so I have adjusted the shock location as if I was running the T3'12 towers
Best lap in 13.5 - 10.95 - Danny Vella
http://www.youtube.com/watch?v=Opk9uhDpaDs

reset all

VER. 6.0 © XRAY