SET-UP SHEET

XRAY T3'12

RACE	Essex Winter Series Rnd 3
TRACK	Fairly Mixed Layout
NAME	Damian Giddins
CITY / COUNTRY	UK
CONTACT	skiddins@hotmail.com

DATE	TEMPERATURE / °F or °C	AIR	TRACK
28/12/11			

QUALIFYING POSITION	BEST LAPTIME /sec	FINAL POSITION	RACE LENGTH /minutes
53/76	14.07		5

TRACK CONDITION			
		[X] CARPET	[ ] ASPHALT
	[ ] TECHNICAL	[ ] MIXED	[X] FAST
TRACTION	[ ] LOW	[X] MEDIUM	[ ] HIGH

FRONT	REAR
TRANSMISSION	
SOLID AXLE [X] YES	BALL DIFFERENTIAL [ ] YES
SOLID ONE WAY DIFF. [ ] YES	
ONE WAY DIFFERENTIAL [ ] YES	
GEAR DIFFERENTIAL [ ] YES	GEAR DIFFERENTIAL [X] YES
OIL	OIL 1000 /Cst

PINION / T	26	SPUR GEAR / T	86
FINAL DRIVE RATIO	6.284615384615384	ROLLOUT	0.00

FRONT		REAR
[ ] ALU [X] PLASTIC	SHOCKS	[X] ALU [ ] PLASTIC
2.8	XRAY SPRINGS	2.6
450	OIL / CST	450
	LENGTH /mm	
	PRELOAD /mm	
10	REBOUND %	10
[X] YES [ ] NO	FOAM INSERTS	[X] YES [ ] NO
[ ] YES [X] NO	O-RING ON SHAFT	[ ] YES [X] NO

○ OPENED
● CLOSED

HOLES IN PISTON

1.4	ANTI-ROLL BAR THICKNESS/mm	1.2

Sorex 32JB	TIRES	Sorex 32JB
	DIAMETER /mm	
Blue (Pre-built)	INSERTS	Blue (Pre-built)
Sticky Fingers	ADDITIVE	Sticky Fingers

FRONT LEFT | FRONT RIGHT | TREATED AREA | REAR LEFT | REAR RIGHT

	WHEELS	
S [ ] M [ ] H [ ]	HARDNESS	S [ ] M [ ] H [ ]

MOTOR	Speed Passion MMM 13.5	TIMING	Standard (Middle)
ROTOR	Std	ARMATURE	
ESC	Black Diamond	BATTERIES	Thunder Power

BRUSHLESS			
PROGRAM	PUNCH	INITIAL BRAKE	AUTO BRAKE

BODY	East Coast Bodies	WING	Std

● [X] - APPLIED S -SOFT M -MEDIUM H -HARD

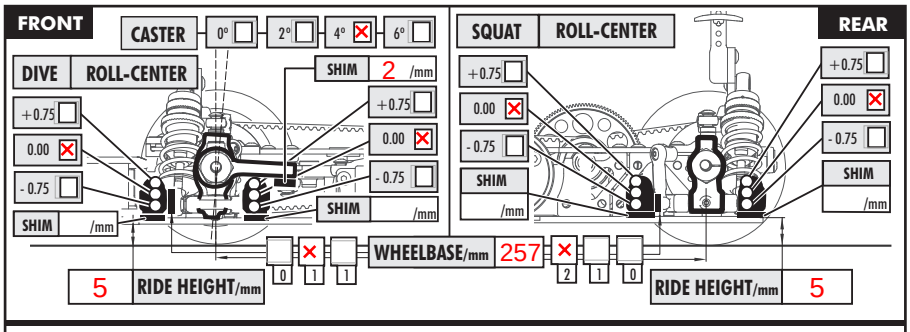

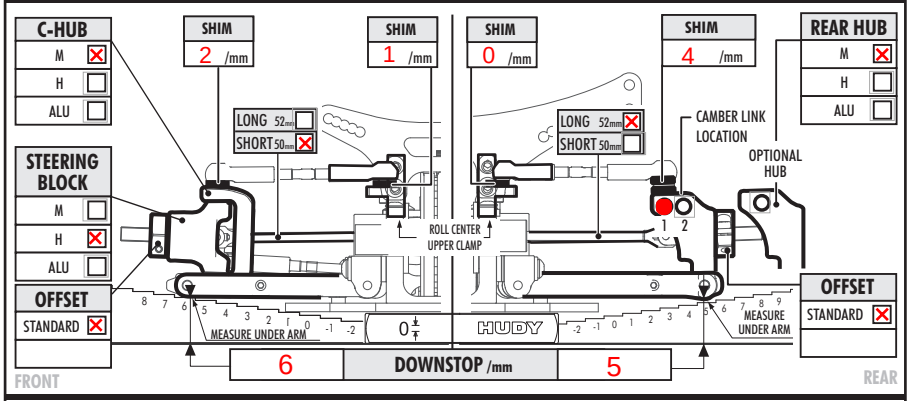

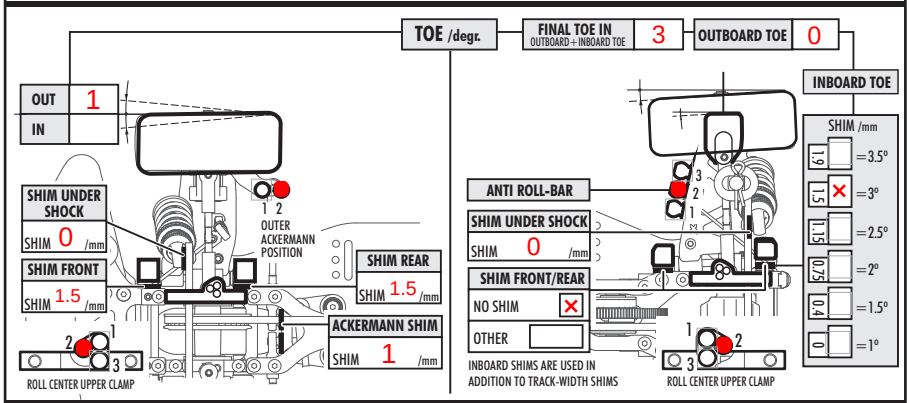

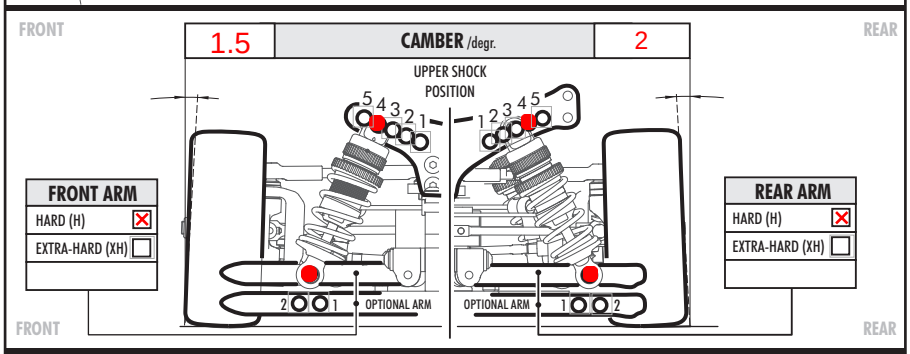

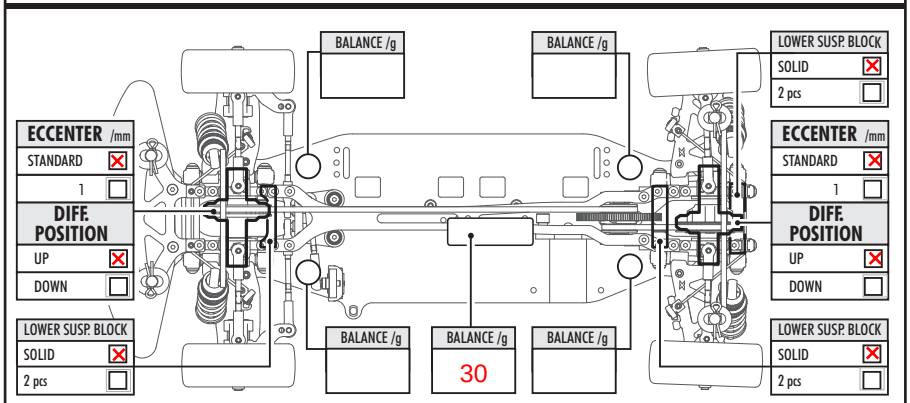

Started with upper clamp position 1 front and rear and 1mm & 0mm on the front camber link, this made the car very twitchy with too much oversteer, especially on the new tyres first thing.
This setup seemed pretty stable (despite the springs being the the wrong way around!)
I actually used the original T3'11 shock towers so I have adjusted the shock location as if I was running the T3'12 towers

Initial Throttle 15%, mid timing 2000rpm, 50deg, high timing 12000, 55deg
Gearing ranged from 6.61 to 7.43, motor temps were around 70degC.

In the last final tried 45mid timing with 50deg high timing at 7.10, the car started to pull hard halfway down the straight and temps were down to 55degC.
Believe the best combination would be to drop gearing to 7.5 or 8.0 lower and keep the timing down.
Side Piece spool alloy outdrives (these require the 50mm front driveshafts)
Best lap in 13.5 - 13.27 Paul Pinkney
Video Of track; http://www.youtube.com/watch?v=D_A4zJeo0V4&feature=related

reset all

VER. 6.0 © XRAY