SET-UP SHEET

XRAY T3'12

RACE	Xray Challenge
TRACK	Hudy Racing Arena Outdoor asphalt track
NAME	Martin Hudy
CITY / COUNTRY	Trencin / Slovakia
CONTACT	martin@hudy.net

DATE	11/05/2012	TEMPERATURE / °F or °C	AIR	TRACK

QUALIFYING POSITION	BEST LAPTIME /sec	FINAL POSITION	RACE LENGTH /minutes
	18.1		5

TRACK CONDITION			
	☐ CARPET	☒ ASPHALT	
☐ TECHNICAL	☐ MIXED	☒ FAST	
TRACTION	☐ LOW	☐ MEDIUM	☒ HIGH

FRONT	REAR
TRANSMISSION	
SOLID AXLE ☐ YES	BALL DIFFERENTIAL ☐ YES
SOLID ONE WAY DIFF. ☐ YES	
ONE WAY DIFFERENTIAL ☐ YES	
GEAR DIFFERENTIAL ☐ YES	GEAR DIFFERENTIAL ☒ YES
OIL	OIL 3000 /Cst

PINION / T	27	SPUR GEAR / T	110
FINAL DRIVE RATIO	4.0740740740741	ROLLOUT	NaN

FRONT		REAR
☒ ALU ☐ PLASTIC	SHOCKS	☒ ALU ☐ PLASTIC
2.8	XRAY SPRINGS	2.6
350	OIL / CST	350
	LENGTH /mm	
	PRELOAD /mm	
0%	REBOUND %	0%
☒ YES ☐ NO	FOAM INSERTS	☒ YES ☐ NO
☐ YES ☒ NO	O-RING ON SHAFT	☐ YES ☒ NO

○ OPENED
● CLOSED

HOLES IN PISTON

1.4	ANTI-ROLL BAR THICKNESS/mm	THICKNESS/mm 1.3

Take off	TIRES	Take Off
	DIAMETER /mm	
	INSERTS	
	ADDITIVE	

FRONT LEFT | FRONT RIGHT | TREATED AREA | REAR LEFT | REAR RIGHT

	WHEELS	
S ☐ M ☐ H ☐	HARDNESS	S ☐ M ☐ H ☐

MOTOR	4.5	TIMING	
ROTOR		ARMATURE	
ESC		BATTERIES	

BRUSHLESS			
PROGRAM	PUNCH	INITIAL BRAKE	AUTO BRAKE

BODY	LTC-R light	WING	MR33

● ☒ - APPLIED S -SOFT M -MEDIUM H -HARD

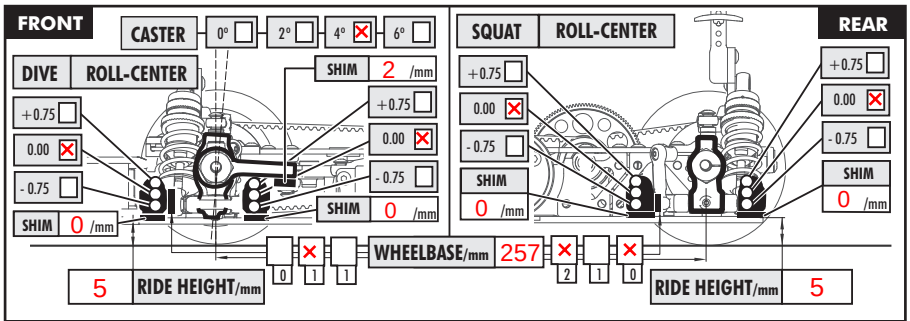

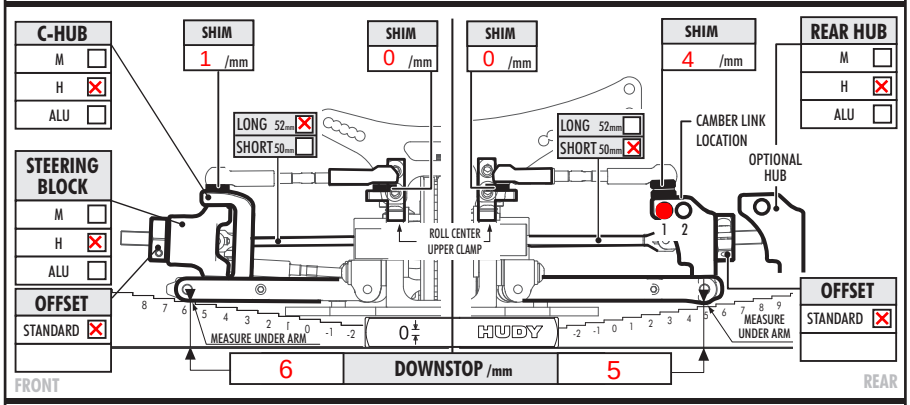

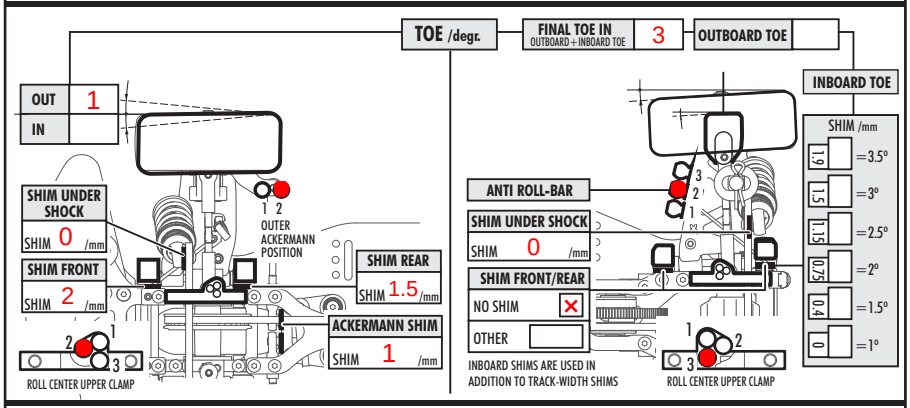

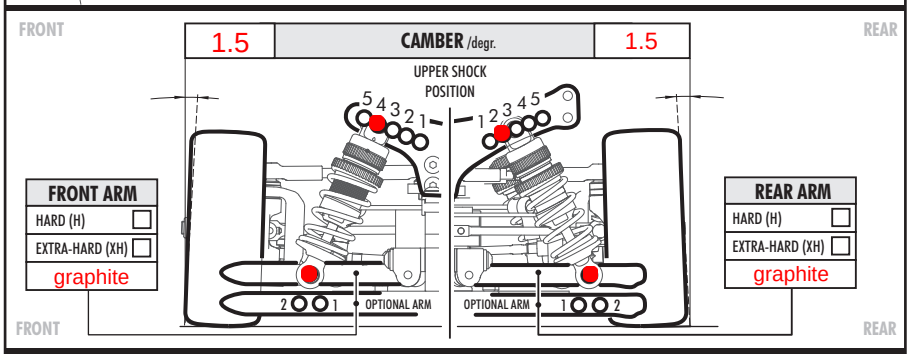

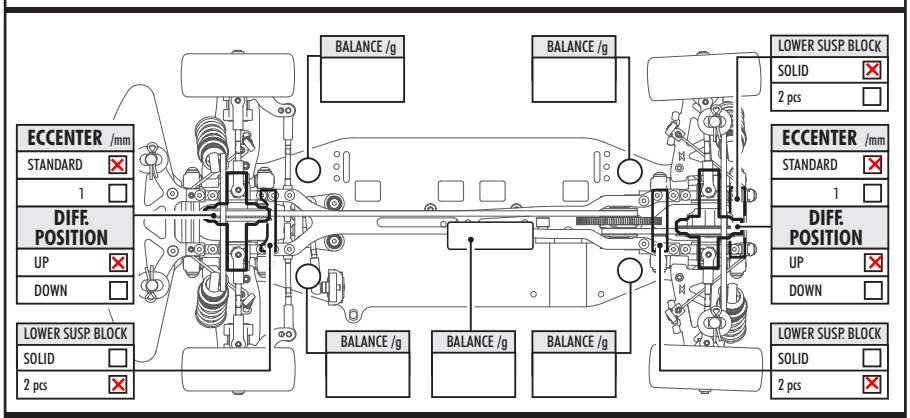

2mm chassis