XPRESS EXECUTE XQ11 SET-UP SHEET

Driver	Fred Flintstone	Track Surface	Indoor / Carpet	Track Temperature			
Date	24/11/2024	Track Traction	High	Result		Air Temperature	
Track	Longwy	Country	France	Best Lap		Humidity		Remark	XQ3S

Front

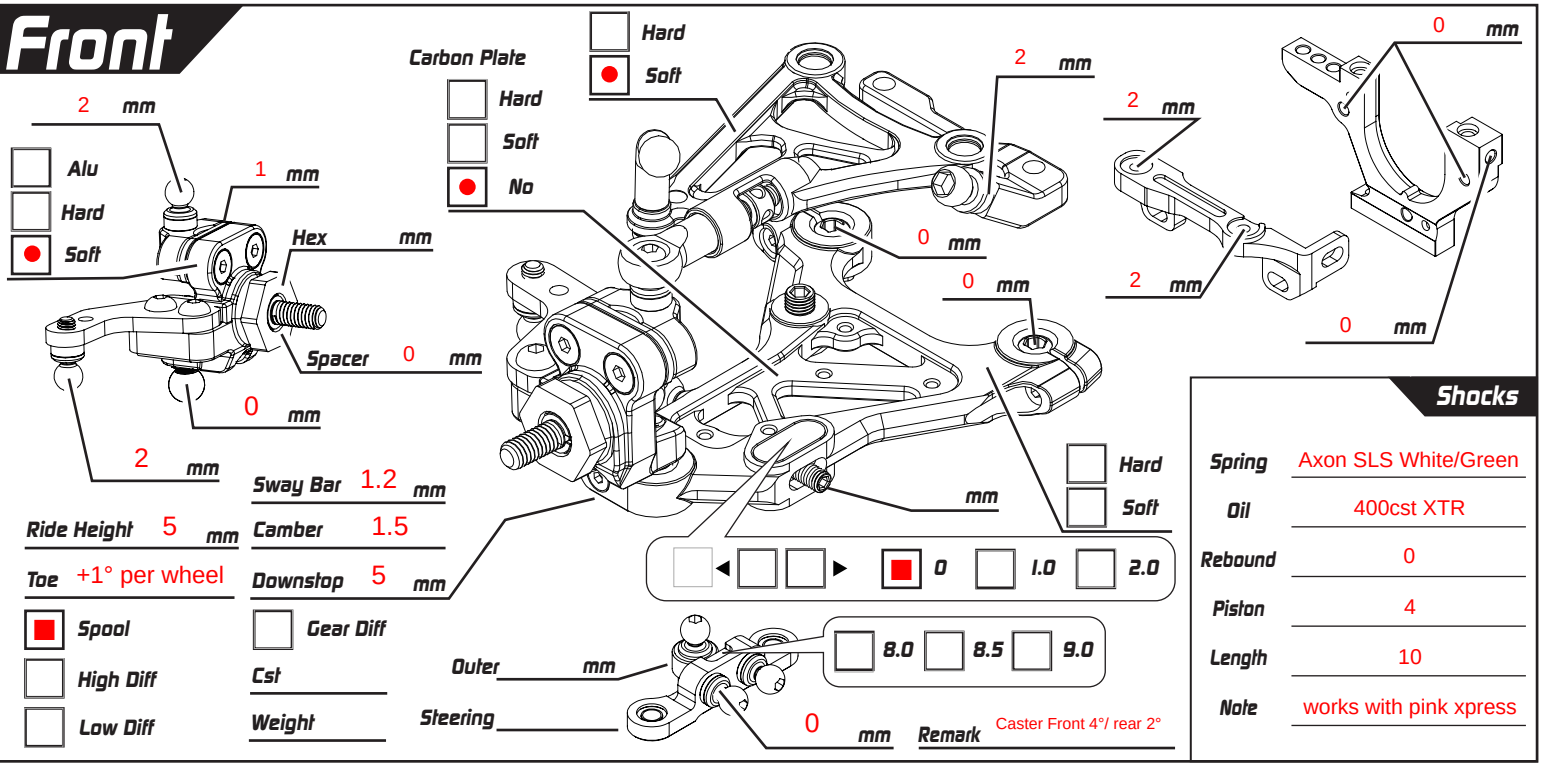

Ride Height	5 mm	Sway Bar	1.2 mm
Toe	+1° per wheel	Camber	1.5
		Downstop	5 mm
Spool		Gear Diff	
High Diff		Cst	
Low Diff		Weight	

Remark: Caster Front 4°/ rear 2°

Shocks

Spring	Axon SLS White/Green
Oil	400cst XTR
Rebound	0
Piston	4
Length	10
Note	works with pink xpress

Rear

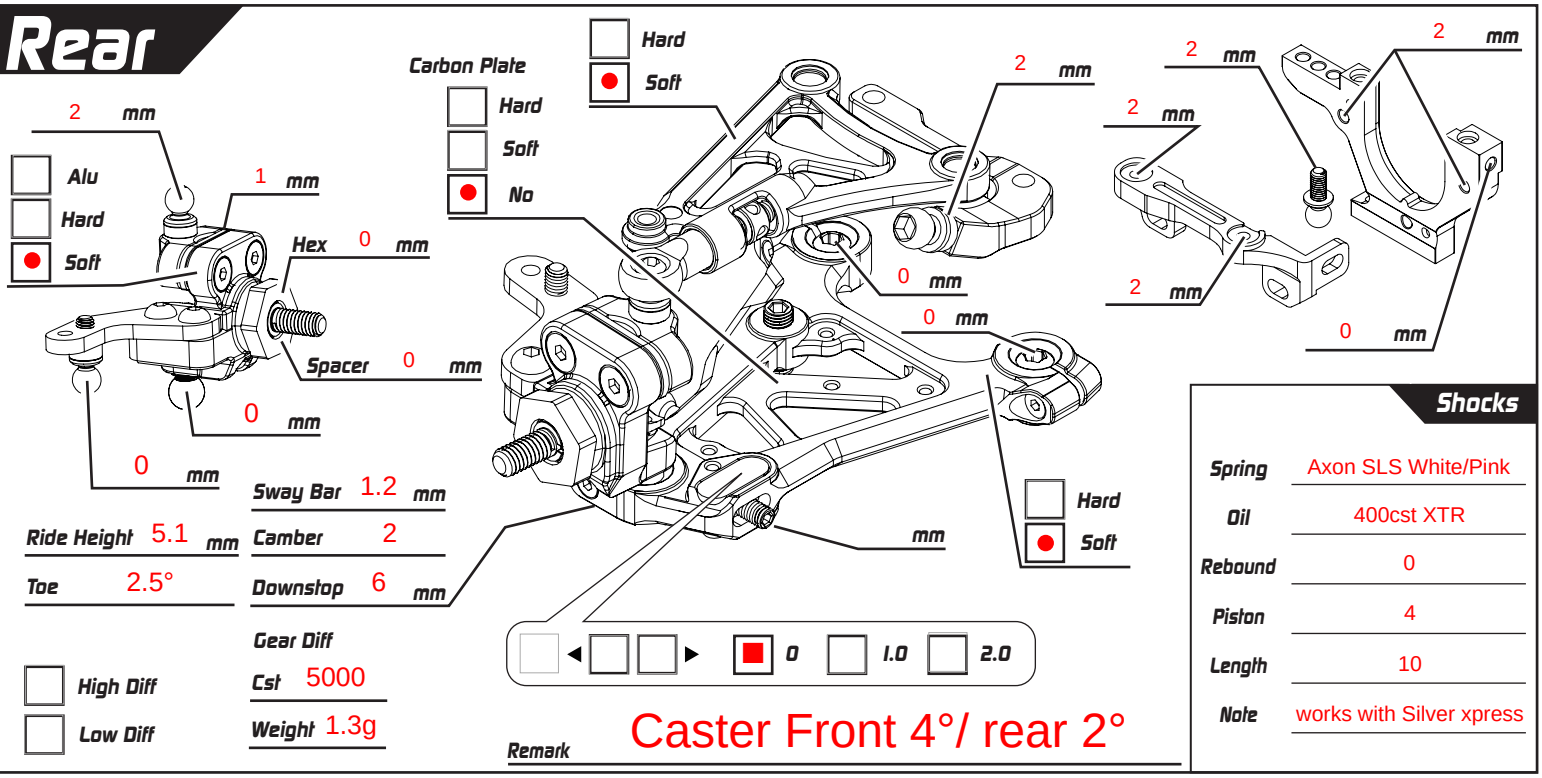

Ride Height	5.1 mm	Sway Bar	1.2 mm
Toe	2.5°	Camber	2
		Downstop	6 mm
		Gear Diff	
High Diff		Cst	5000
Low Diff		Weight	1.3g

Remark: Caster Front 4°/ rear 2°

Shocks

Spring	Axon SLS White/Pink
Oil	400cst XTR
Rebound	0
Piston	4
Length	10
Note	works with Silver xpress

Weight g

Battery: Zombie

Body: Tam Z Autech

Tires: Ride 36086

Additive: CS HG

ESC: Radon TP

Motor: Fleta V3 17.5

Spur 64 P/ 94 T

Pinon 64 P/ 39 T

Servo Horn Height mm

Servo

FDR 4.579487

Weight g

Weight g

Carbon

Alu
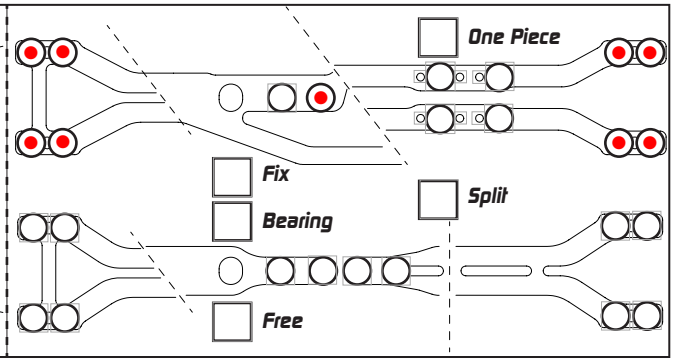
Weight g