XPRESS EXECUTE XQ11 SET-UP SHEET

Driver	Yugo Nagashima	Track Surface	Outdoor / Asphalt	Track Temperature	37
Date	3 March 2024	Track Traction	High	Result	
				Air Temperature	42
Track	Rc Addict	Country	BKK Thailand	Best Lap	
Humidity		Remark			

Front

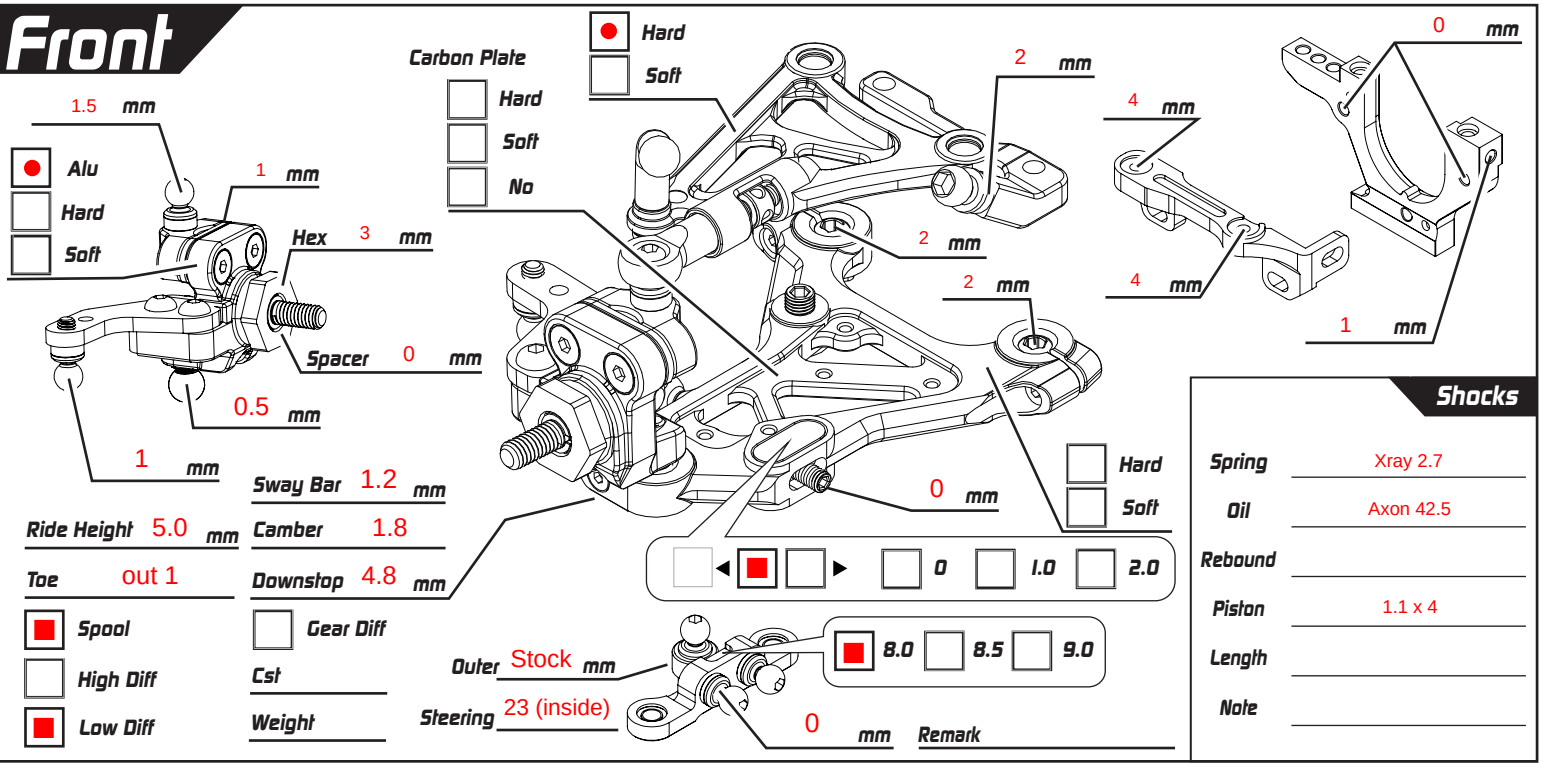

Sway Bar 1.2 mm
Ride Height 5.0 mm
Camber 1.8
Toe out 1
Downstop 4.8 mm
Spool
High Diff
Low Diff
Gear Diff
Cst
Weight
Outer Stock mm
Steering 23 (inside)
0 mm
Remark

Shocks

Spring	Xray 2.7
Oil	Axon 42.5
Rebound	
Piston	1.1 x 4
Length	
Note	

Rear

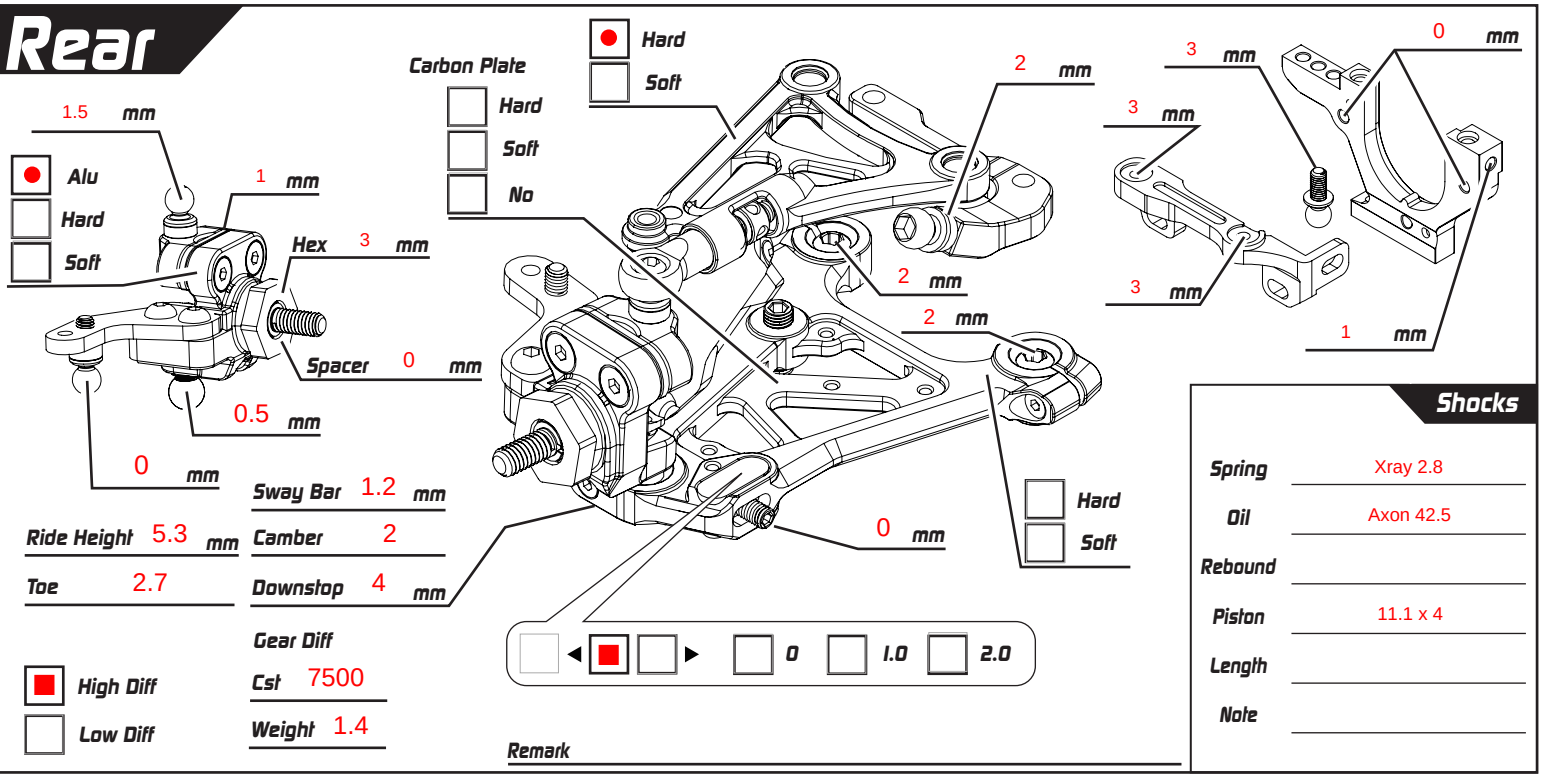

Sway Bar 1.2 mm
Ride Height 5.3 mm
Camber 2
Toe 2.7
Downstop 4 mm
Gear Diff
High Diff
Low Diff
Cst 7500
Weight 1.4
Remark

Shocks

Spring	Xray 2.8
Oil	Axon 42.5
Rebound	
Piston	11.1 x 4
Length	
Note	

Weight g

Battery fido 5900mah

Body twister ul

Tires sweep

Additive v3 yellow

ESC zombie tz-01

Motor zombie evo2 4.5t

Spur 64 P/ 110 T

Pinon 64 P/ 28 T

Servo Horn Height 18 mm

Servo s15 pgb

FDR 7.464285

Weight g

Weight 5 g

Carbon

Alu
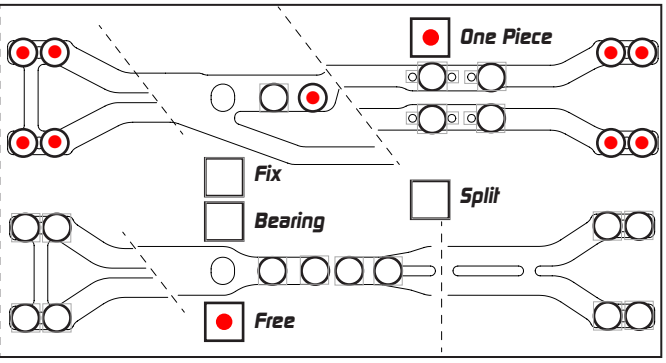
Weight 5 g