# XPRESS EXECUTE XQ1 SET-UP SHEET

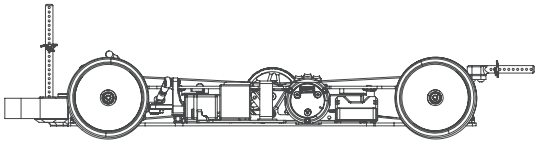

| | | | | | | | |
|---|---|---|---|---|---|---|---|
| Driver | Yugo Nagashima | Track Surface | Indoor / Outdoor / Asphalt / Carpet | | | Track Temperture | |
| Date | 14.15/9/2024 | Track Traction | Hi | Result | 4th | Air Temperture | |
| Track | ESIC | Country | | Best Lap | | Humidity | |

## Front

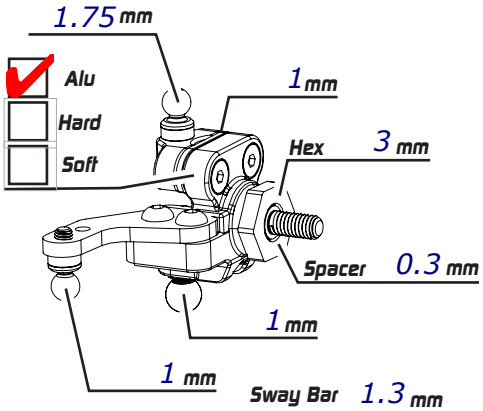


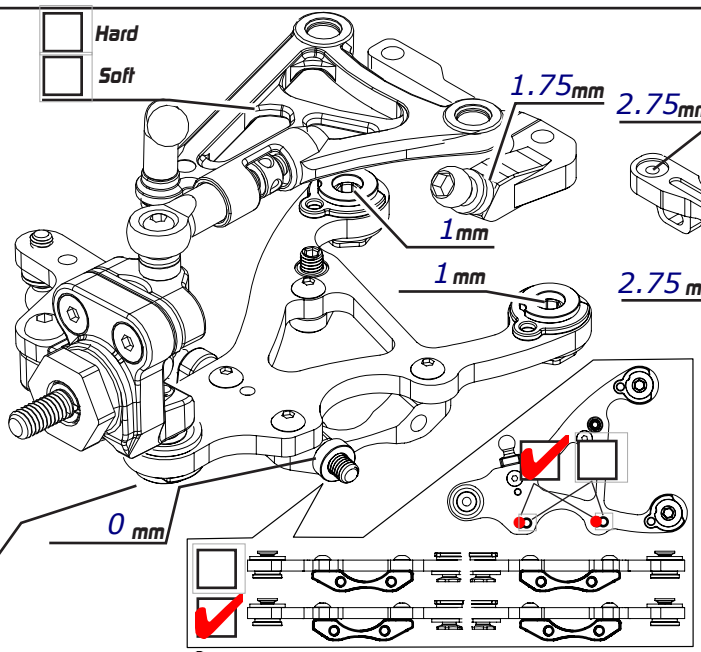


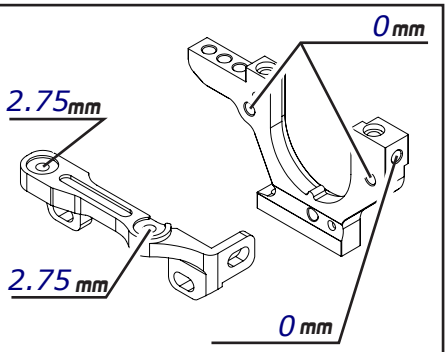


| | | | |
|---|---|---|---|
| Sway Bar | 1.3 mm | | |
| Ride Height | 5 mm | Camber | 2 |
| Toe | -1.2 | Downstop | 4.6 mm |
| Spool | | Gear Diff | |
| High Diff | | Cst | |
| Low Diff | | Weight | |

Outer 7 mm
Steering 25.5°
0.75 mm
8.0 8.5 9.0
Remark

### Shocks

| | |
|---|---|
| Spring | Axon 2.65 |
| Oil | 425 |
| Rebound | |
| Piston | 1.1-4 |
| Length | 9.5mm |
| Note | Caster 4° |

## Rear

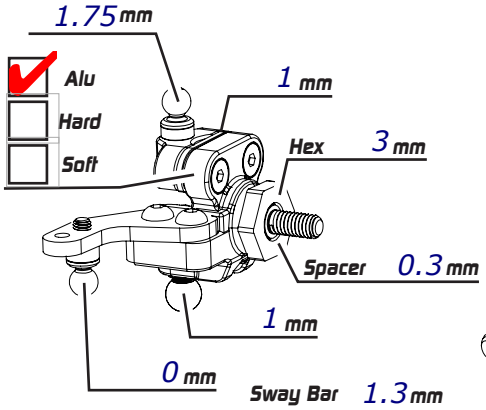


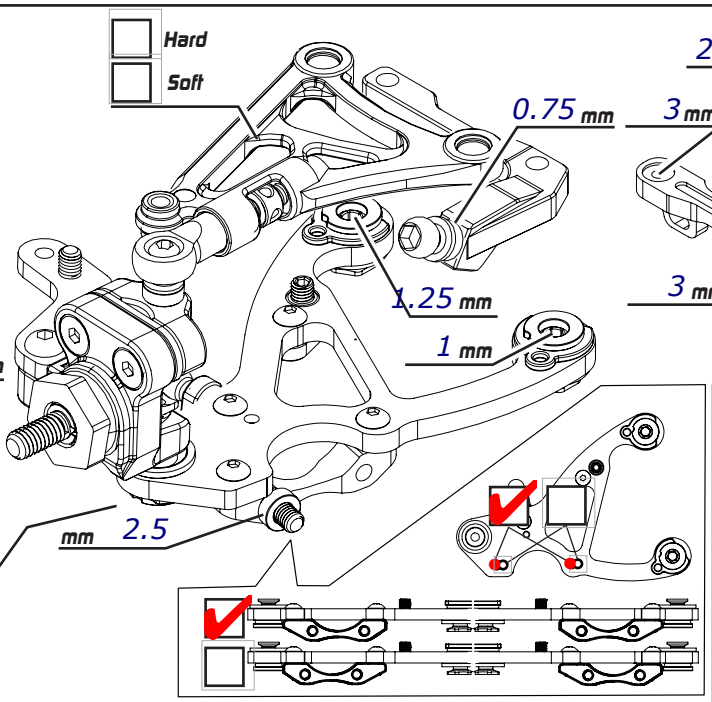


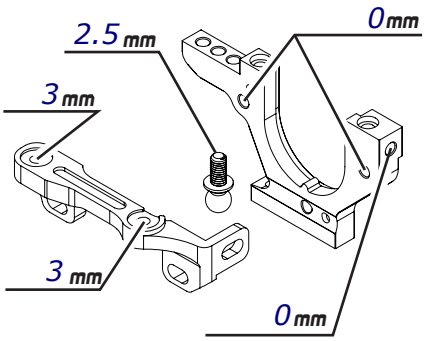


| | | | |
|---|---|---|---|
| Sway Bar | 1.3mm | | |
| Ride Height | 5.4mm | Camber | 2 |
| Toe | 3° | Downstop | 3.6 mm |
| | | Gear Diff | |
| High Diff | | Cst | 7k |
| Low Diff | | Weight | 1.4 |

Remark

### Shocks

| | |
|---|---|
| Spring | Axon 2.7 |
| Oil | 425 |
| Rebound | |
| Piston | 1.1-4 |
| Length | 9.5 |
| Note | Caster -2.5° |

Weight g

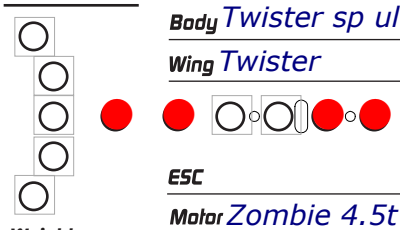

Weight g

| | | | |
|---|---|---|---|
| Battery | Fido6800mAh | Servo | S15-xp |
| Body | Twister sp ul | Tires | D36 |
| Wing | Twister | Additive | Orange |
| ESC | | Servo Horn Height | 18 mm |
| Motor | Zombie 4.5t | Timing | 28 |
| Pinon | 28 T | Spur | 110 T / 64 P |
| | | FDR | 7.46 |

Weight 5 g

Carbon
Alu
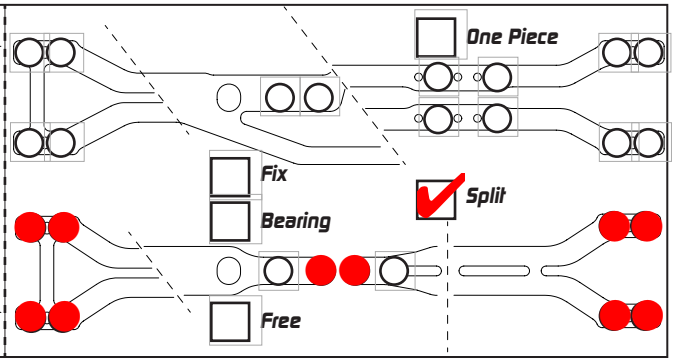
Weight 5 g