XPRESS EXECUTE XQ11 SET-UP SHEET

Driver	YoshiyasuYanagisawa	Track Surface	Indoor / Carpet	Track Temperature			
Date		Track Traction	High	Result		Air Temperature	
Track	tsukuba rc park	Country	JAPAN	Best Lap		Humidity	Remark

Front

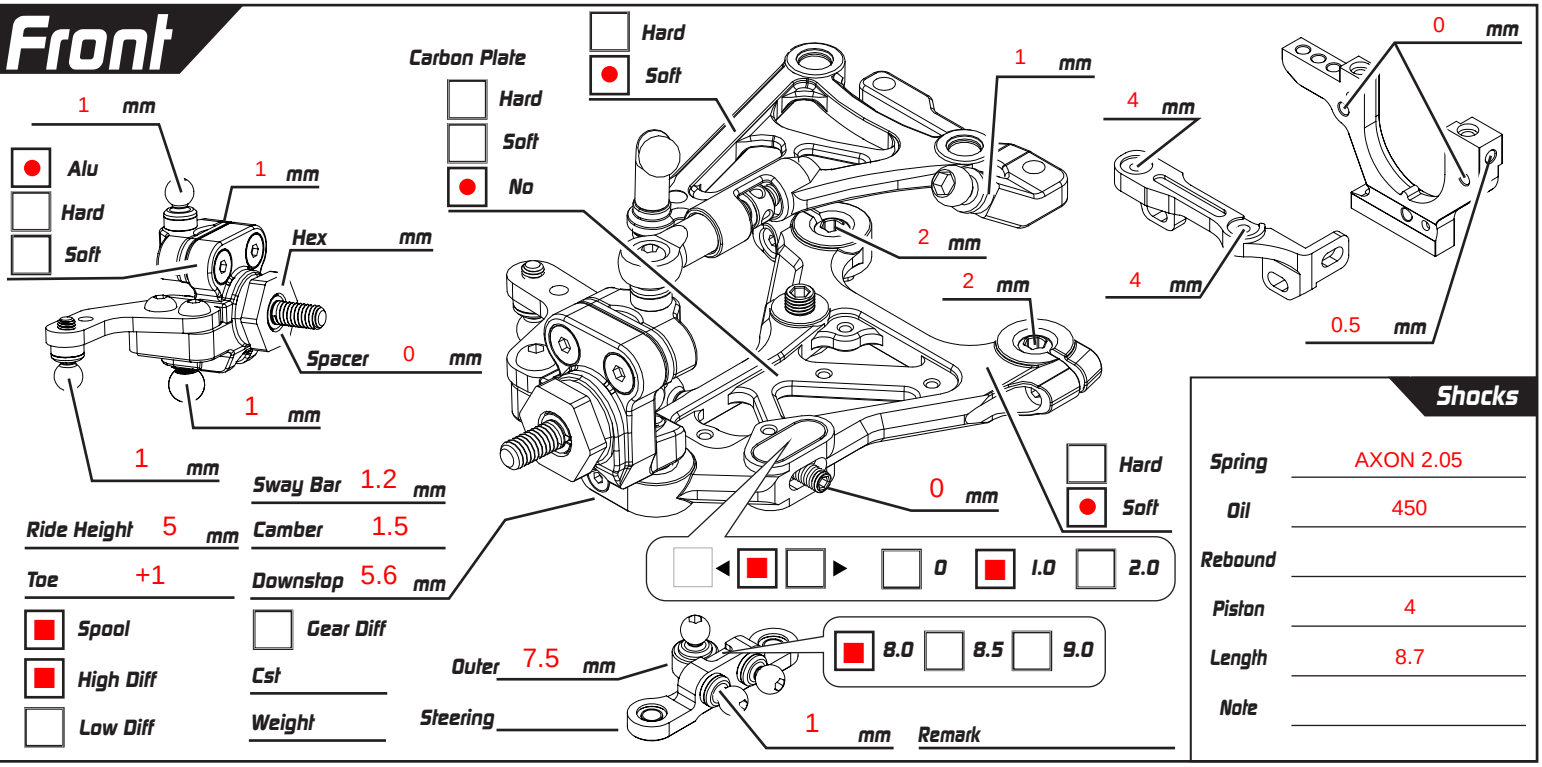

Sway Bar	1.2 mm		
Ride Height	5 mm	Camber	1.5
Toe	+1	Downstop	5.6 mm
Spool		Gear Diff	
High Diff		Cst	
Low Diff		Weight	
Outer	7.5 mm		
Steering			
Remark			

Shocks

Spring	AXON 2.05
Oil	450
Rebound	
Piston	4
Length	8.7
Note	

Rear

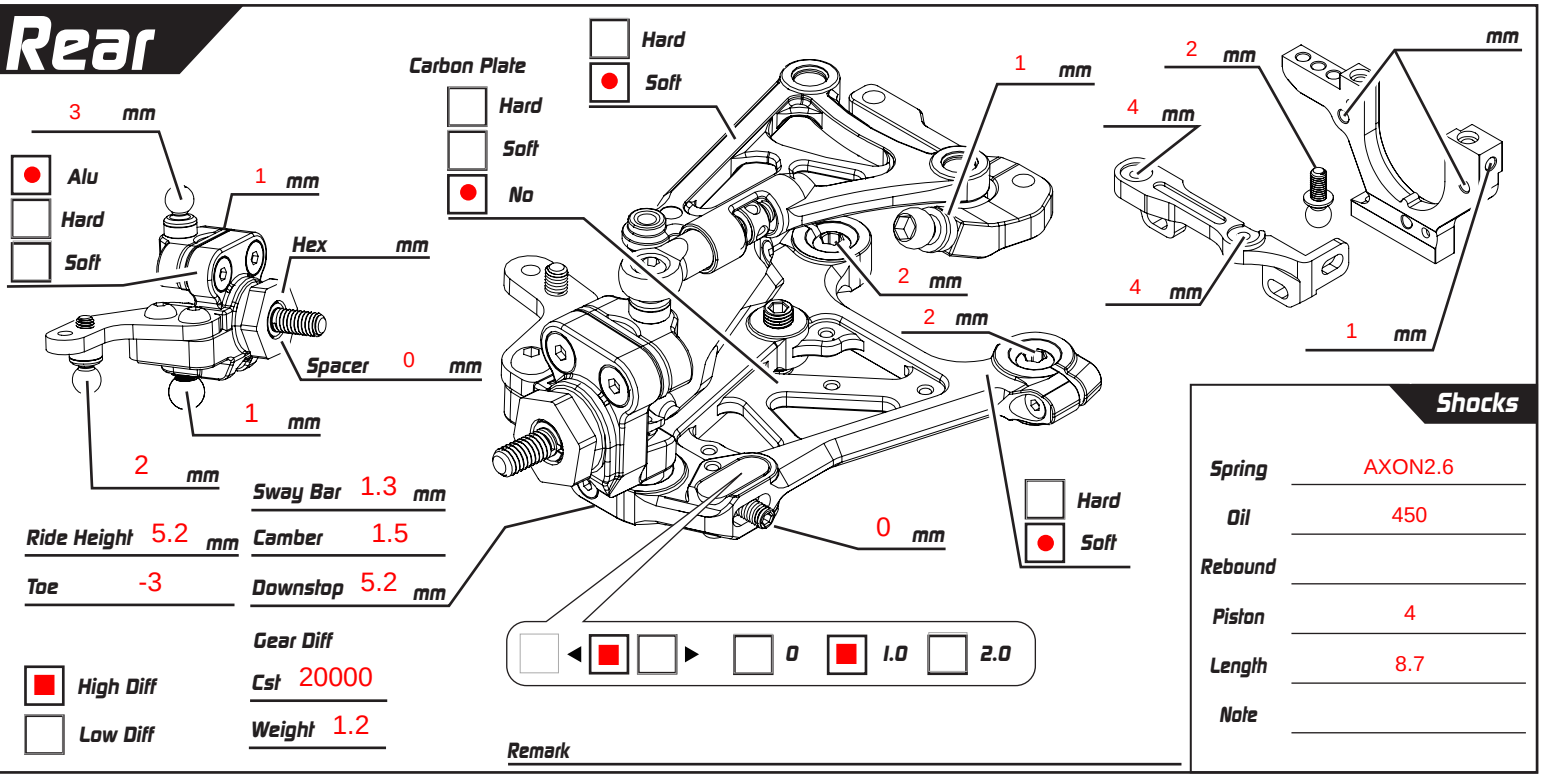

Sway Bar	1.3 mm		
Ride Height	5.2 mm	Camber	1.5
Toe	-3	Downstop	5.2 mm
		Gear Diff	
High Diff		Cst	20000
Low Diff		Weight	1.2
Remark			

Shocks
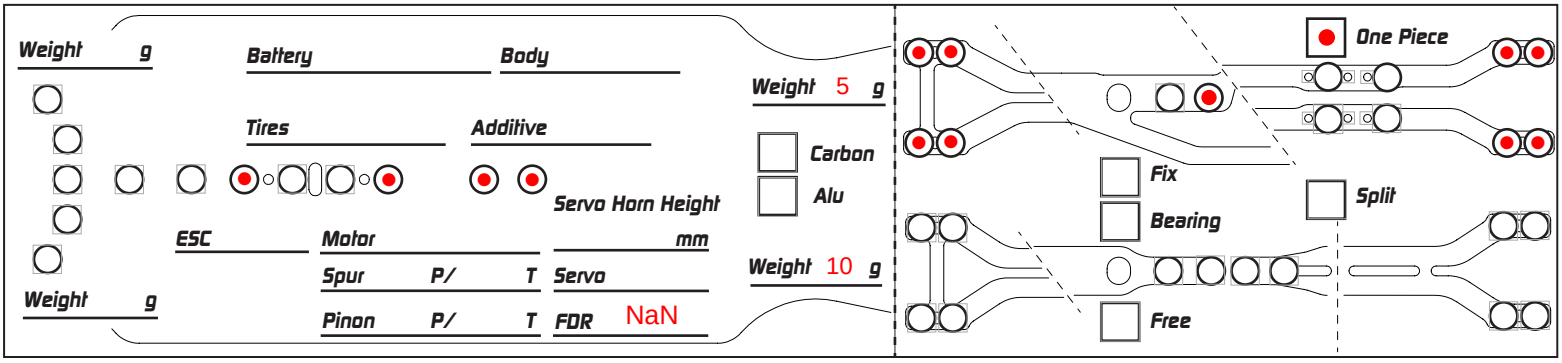
Spring	AXON2.6
Oil	450
Rebound	
Piston	4
Length	8.7
Note