XPRESS EXECUTE XQ11 SET-UP SHEET

Driver	masaya	Track Surface	Outdoor / Asphalt	Track Temperature			
Date	24/9	Track Traction	Medium	Result		Air Temperature	
Track	Honguu	Country		Best Lap		Humidity	Remark

Front

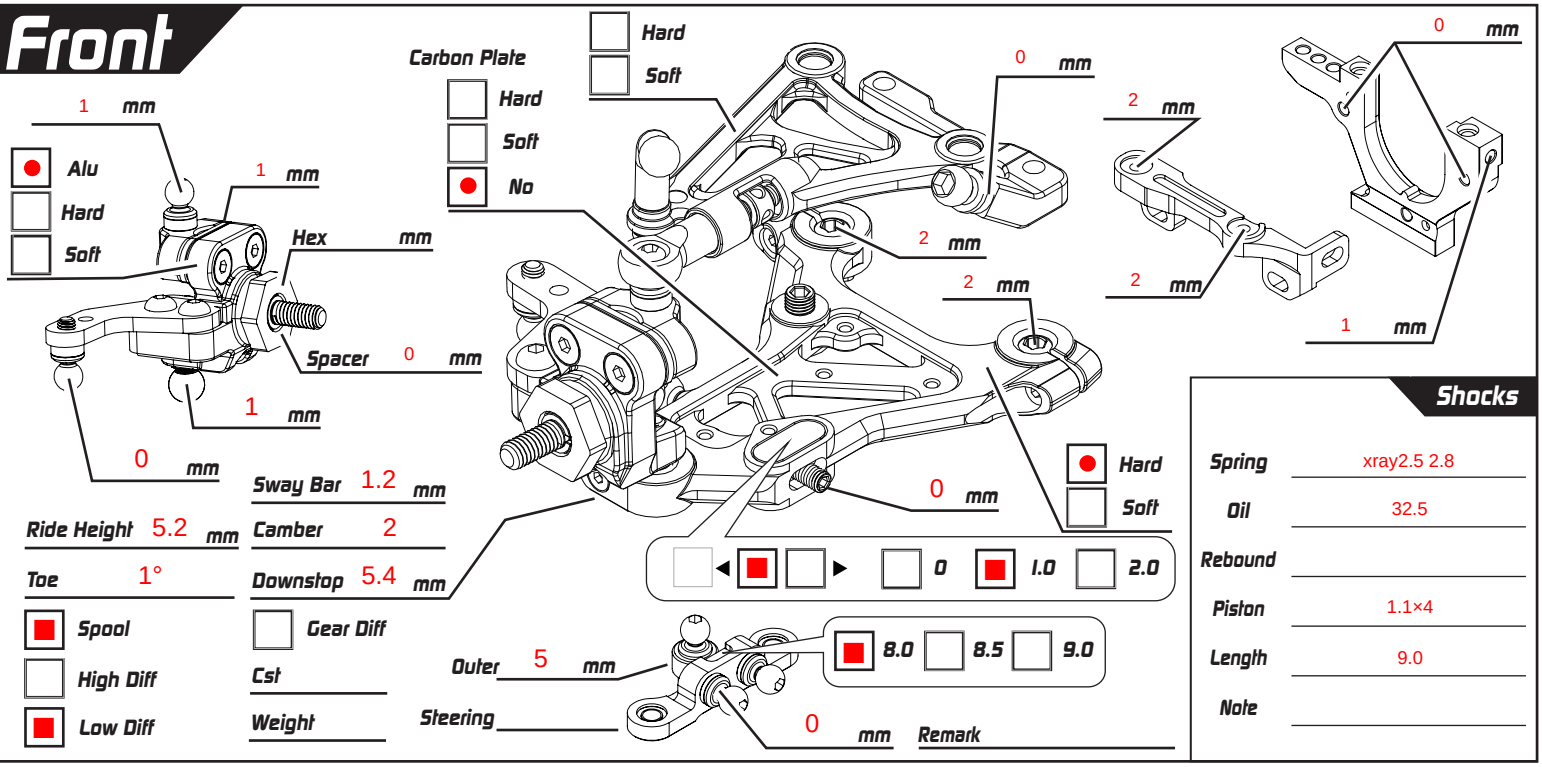

Sway Bar 1.2 mm
Ride Height 5.2 mm
Camber 2
Toe 1°
Downstop 5.4 mm

- [x] Spool
- [ ] High Diff
- [x] Low Diff

- [ ] Gear Diff

Cst
Weight
Remark

Shocks

Spring	xray2.5 2.8
Oil	32.5
Rebound	
Piston	1.1×4
Length	9.0
Note	

Rear

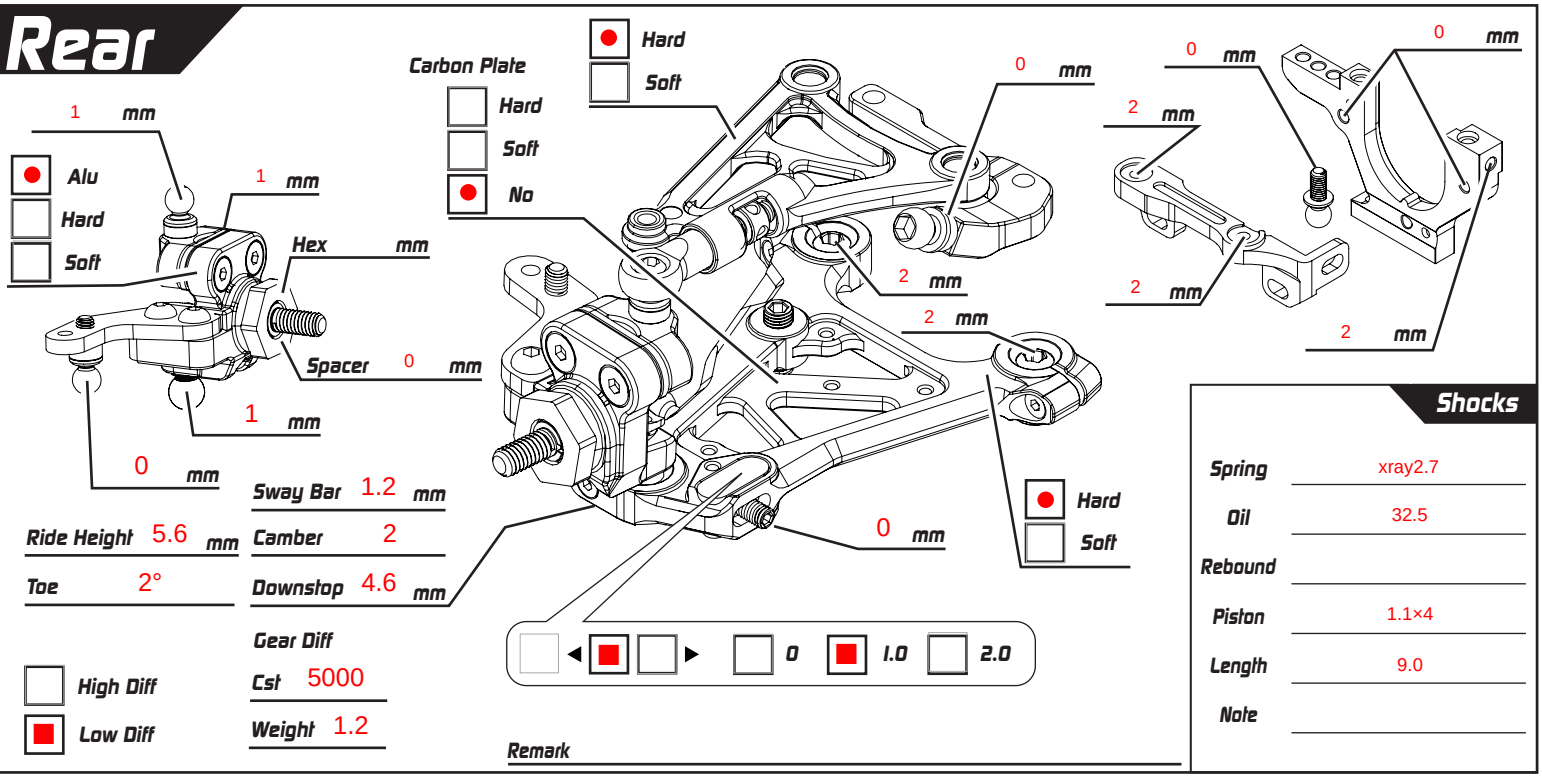

Sway Bar 1.2 mm
Ride Height 5.6 mm
Camber 2
Toe 2°
Downstop 4.6 mm

Gear Diff

- [ ] High Diff
- [x] Low Diff

Cst 5000
Weight 1.2
Remark

Shocks

Spring	xray2.7
Oil	32.5
Rebound	
Piston	1.1×4
Length	9.0
Note	

Weight 0 g
Battery SUNPADOW
Body Twister
Tires RUSH 36X
Additive YURUGIX
ESC HW
Motor 4.5T
Spur 64 P/ 112 T
Pinon 64 P/ 29 T
Servo Horn Height 18 mm
Servo KO PROPO
FDR 7.337931
Weight 0 g
Weight 0 g
Weight 0 g
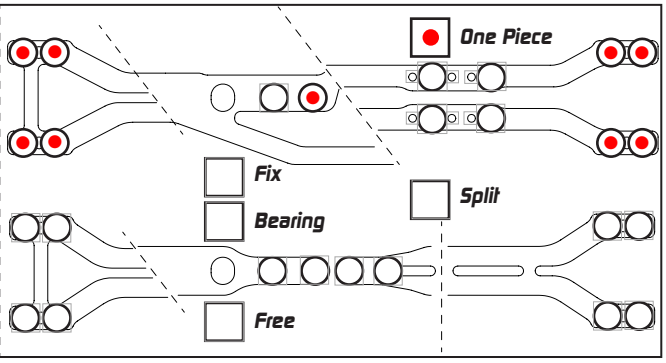
- [x] Carbon
- [ ] Alu