XPRESS EXECUTE XQ11 SET-UP SHEET

Driver	Mark Raddenbury	Track Surface	Indoor / Carpet			Track Temperature	
Date	15/10/23	Track Traction	Medium	Result	A8	Air Temperature	
Track	Chippenham	Country	UK	Best Lap	13.57	Humidity	
Remark	0.5 caster and 6k diff to make less reactive						

Front

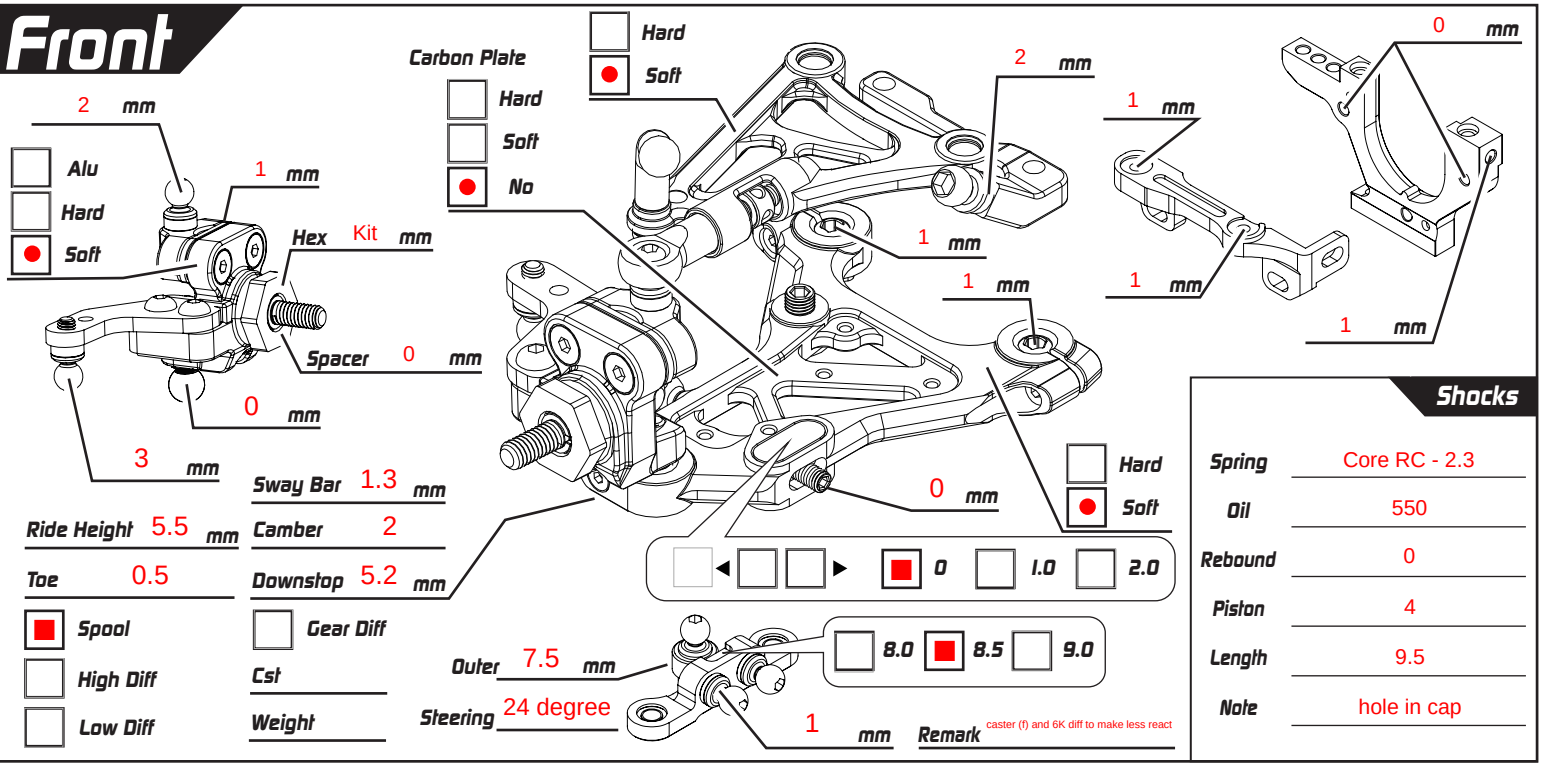

Sway Bar	1.3 mm	Ride Height	5.5 mm
Camber	2	Toe	0.5
Downstop	5.2 mm	Spool	■
Gear Diff		High Diff	
Cst		Low Diff	
Weight		Outer	7.5 mm
Steering	24 degree	Remark	caster (f) and 6K diff to make less react

Shocks

Spring	Core RC - 2.3
Oil	550
Rebound	0
Piston	4
Length	9.5
Note	hole in cap

Rear

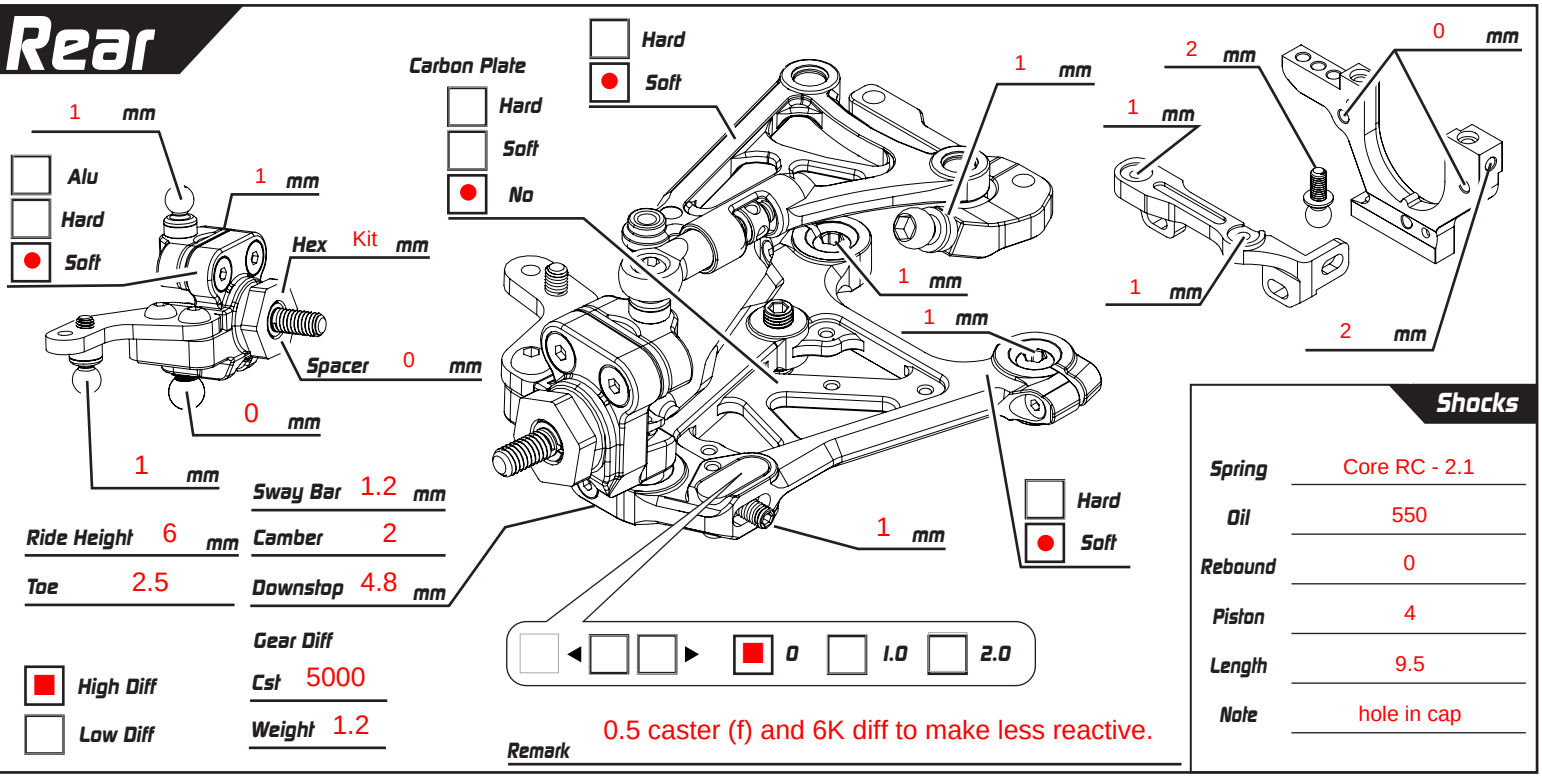

Sway Bar	1.2 mm	Ride Height	6 mm
Camber	2	Toe	2.5
Downstop	4.8 mm	High Diff	■
Gear Diff		Low Diff	
Cst	5000		
Weight	1.2		
Remark	0.5 caster (f) and 6K diff to make less reactive.		

Shocks
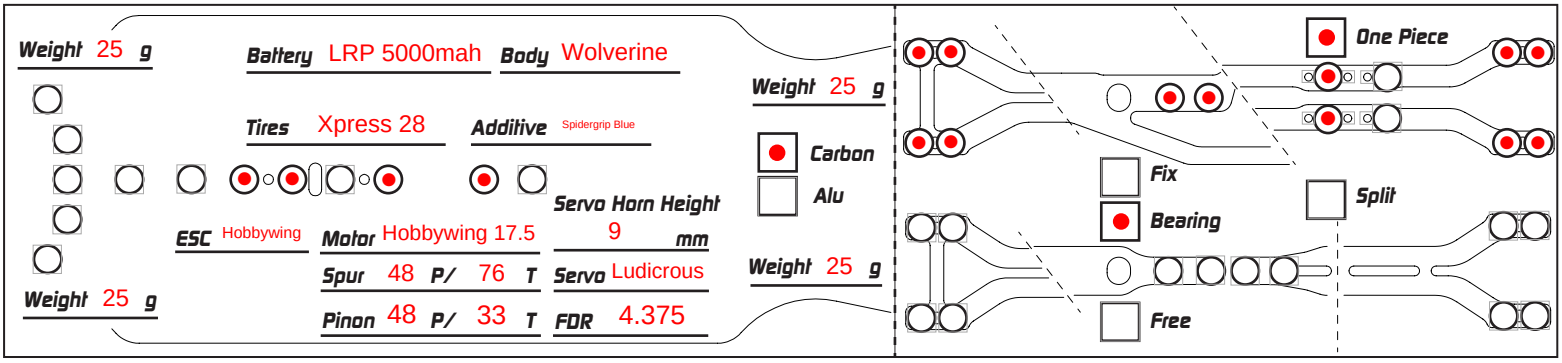
Spring	Core RC - 2.1
Oil	550
Rebound	0
Piston	4
Length	9.5
Note	hole in cap