XPRESS EXECUTE XQ11 SET-UP SHEET

Driver	Felix Law	Track Surface	Outdoor / Asphalt	Track Temperature			
Date	9/24/23	Track Traction	Medium	Result	3rd	Air Temperature	
Track	Valkeria RC	Country	USA	Best Lap	12.5	Humidity	Remark

Front

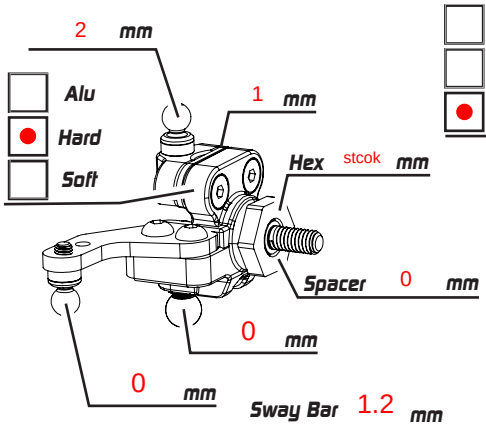

- [ ] Alu
- [x] Hard
- [ ] Soft

Carbon Plate
- [ ] Hard
- [ ] Soft
- [x] No

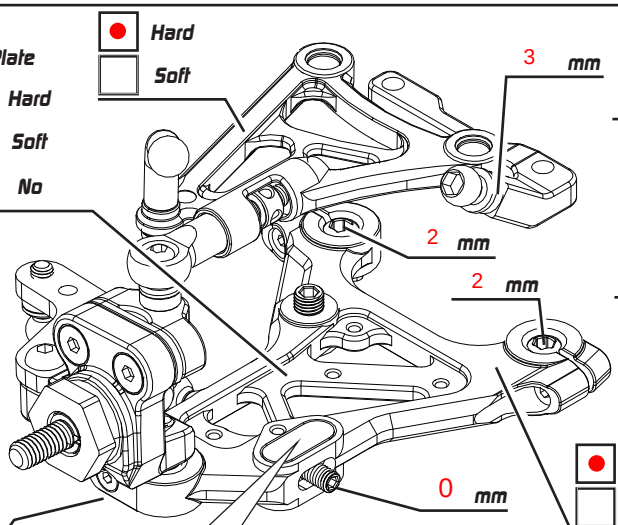

- [x] Hard
- [ ] Soft

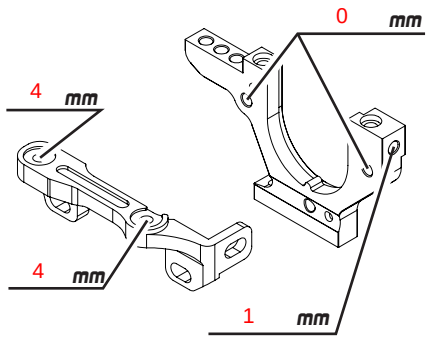

Ride Height	5.6 mm	Sway Bar	1.2 mm
Toe	1	Camber	1
		Downstop	4.6 mm

- [x] Spool
- [ ] High Diff
- [x] Low Diff

- [ ] Gear Diff

Cst	
Weight	

Steering: ◀ [ ] [ ] ▶ [x] 0 [ ] 1.0 [ ] 2.0

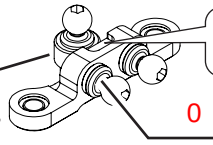

Outer 7.5 mm — [x] 8.0 [ ] 8.5 [ ] 9.0

Steering 27 — 0 mm — Remark

Shocks

Spring	axon 2.15
Oil	400
Rebound	
Piston	stock
Length	10.5
Note	

Rear

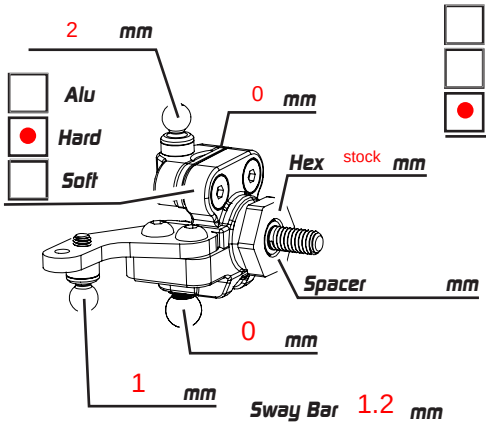

- [ ] Alu
- [x] Hard
- [ ] Soft

Carbon Plate
- [ ] Hard
- [ ] Soft
- [x] No

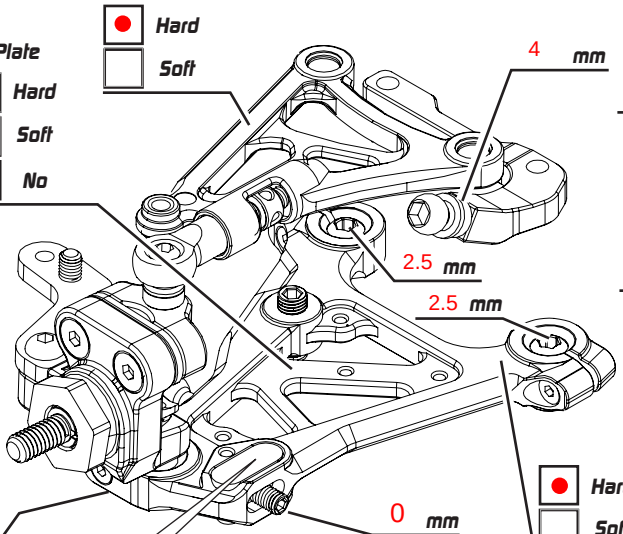

- [x] Hard
- [ ] Soft

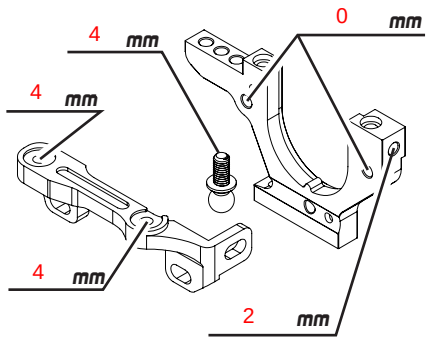

Ride Height	5.8 mm	Sway Bar	1.2 mm
Toe	3	Camber	2
		Downstop	4.0 mm

- [ ] High Diff
- [x] Low Diff

Gear Diff

Cst	6000
Weight	1.0

Steering: ◀ [ ] [x] ▶ [ ] 0 [ ] 1.0 [x] 2.0

Remark

Shocks

Spring	Serpent 2.8
Oil	400
Rebound	
Piston	stock
Length	10.5
Note	

Weight g

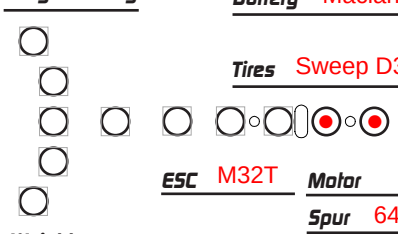

Weight g

Battery Maclan 6000 — Body JC

Tires Sweep D36 — Additive Cruz

ESC M32T — Motor 4.5 — Servo Horn Height 17 mm

Spur 64 P/ 110 T — Servo LH 2

Pinon 64 P/ 28 T — FDR 7.464

Weight 10 g

- [x] Carbon
- [ ] Alu

Weight 10 g

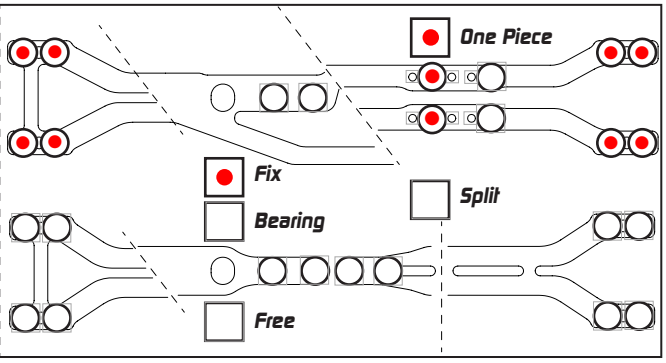

- [x] One Piece
- [x] Fix
- [ ] Bearing
- [ ] Split
- [ ] Free