XPRESS EXECUTE XQ11 SET-UP SHEET

Driver	Felix Law	Track Surface	Outdoor / Asphalt	Track Temperature			
Date	2/25/24	Track Traction	Medium	Result	TQ	Air Temperature	
Track	Coral Spring	Country	USA	Best Lap	14.2	Humidity	Remark

Front

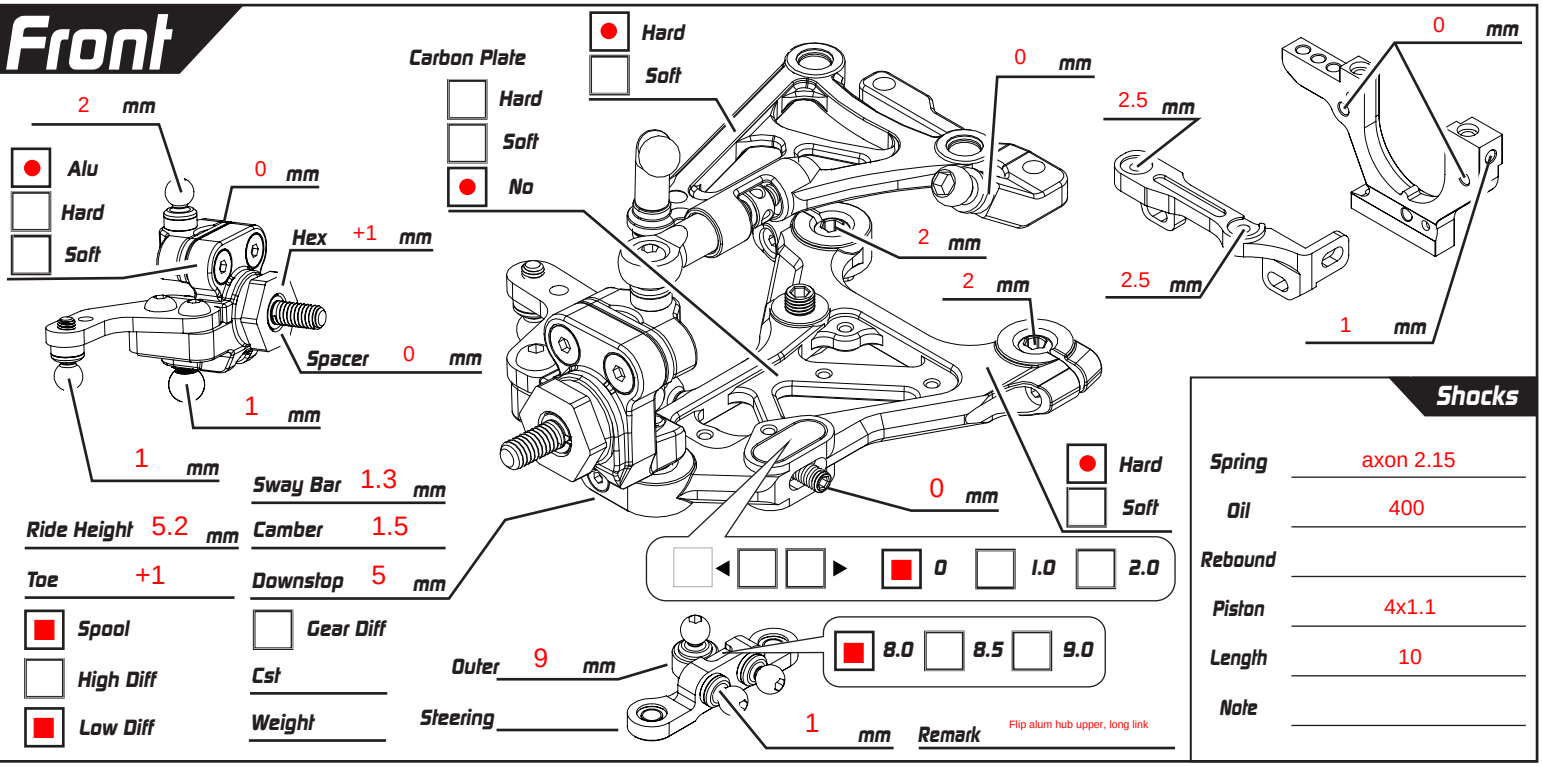

Sway Bar 1.3 mm
Ride Height 5.2 mm
Camber 1.5
Toe +1
Downstop 5 mm

- [x] Spool
- [ ] High Diff
- [x] Low Diff

- [ ] Gear Diff

Cst
Weight

Remark: Flip alum hub upper, long link

Shocks

Spring	axon 2.15
Oil	400
Rebound	
Piston	4x1.1
Length	10
Note	

Rear

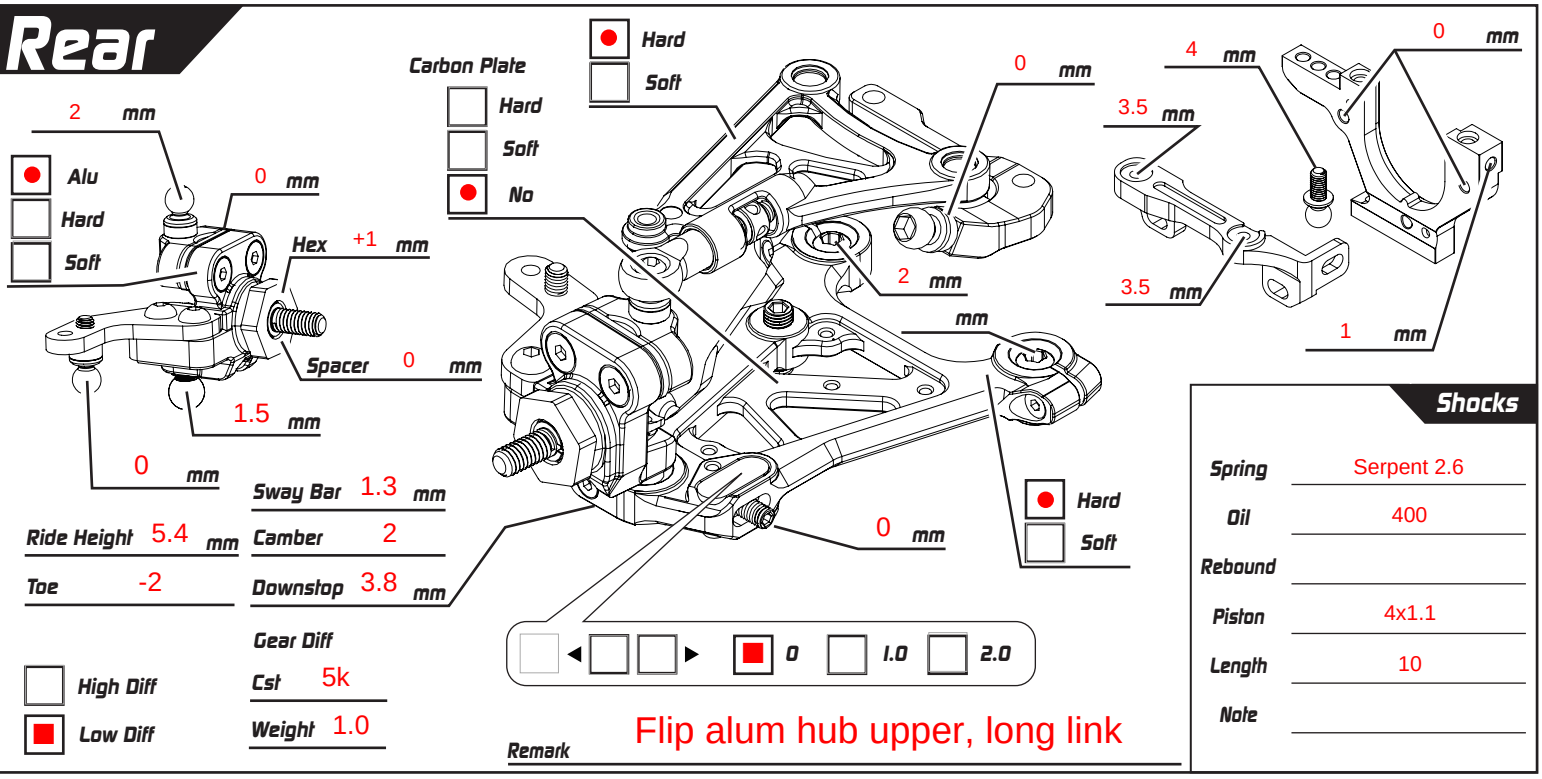

Sway Bar 1.3 mm
Ride Height 5.4 mm
Camber 2
Toe -2
Downstop 3.8 mm

Gear Diff

- [ ] High Diff
- [x] Low Diff

Cst 5k
Weight 1.0

Remark: Flip alum hub upper, long link

Shocks

Spring	Serpent 2.6
Oil	400
Rebound	
Piston	4x1.1
Length	10
Note	

Weight g

Battery 6000 lcg
Body JC A one
Tires Sweep D36
Additive SXT

ESC
Motor 4.5
Spur 64 P/ 110 T
Pinon 64 P/ 29 T

Servo Horn Height 17 mm
Servo SSL LH-2
FDR 7.206

Weight g

Weight g

- [x] Carbon
- [ ] Alu
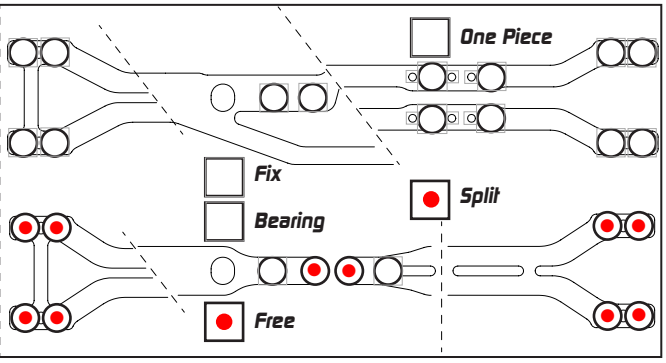
Weight g