XPRESS EXECUTE XQ11 SET-UP SHEET

Driver	Eric Lam	Track Surface	Outdoor / Asphalt	Track Temperature			
Date	12-11-2023	Track Traction	Medium	Result	A2	Air Temperature	
Track	PYC	Country	Hong Kong	Best Lap	13.7	Humidity	Remark

Front

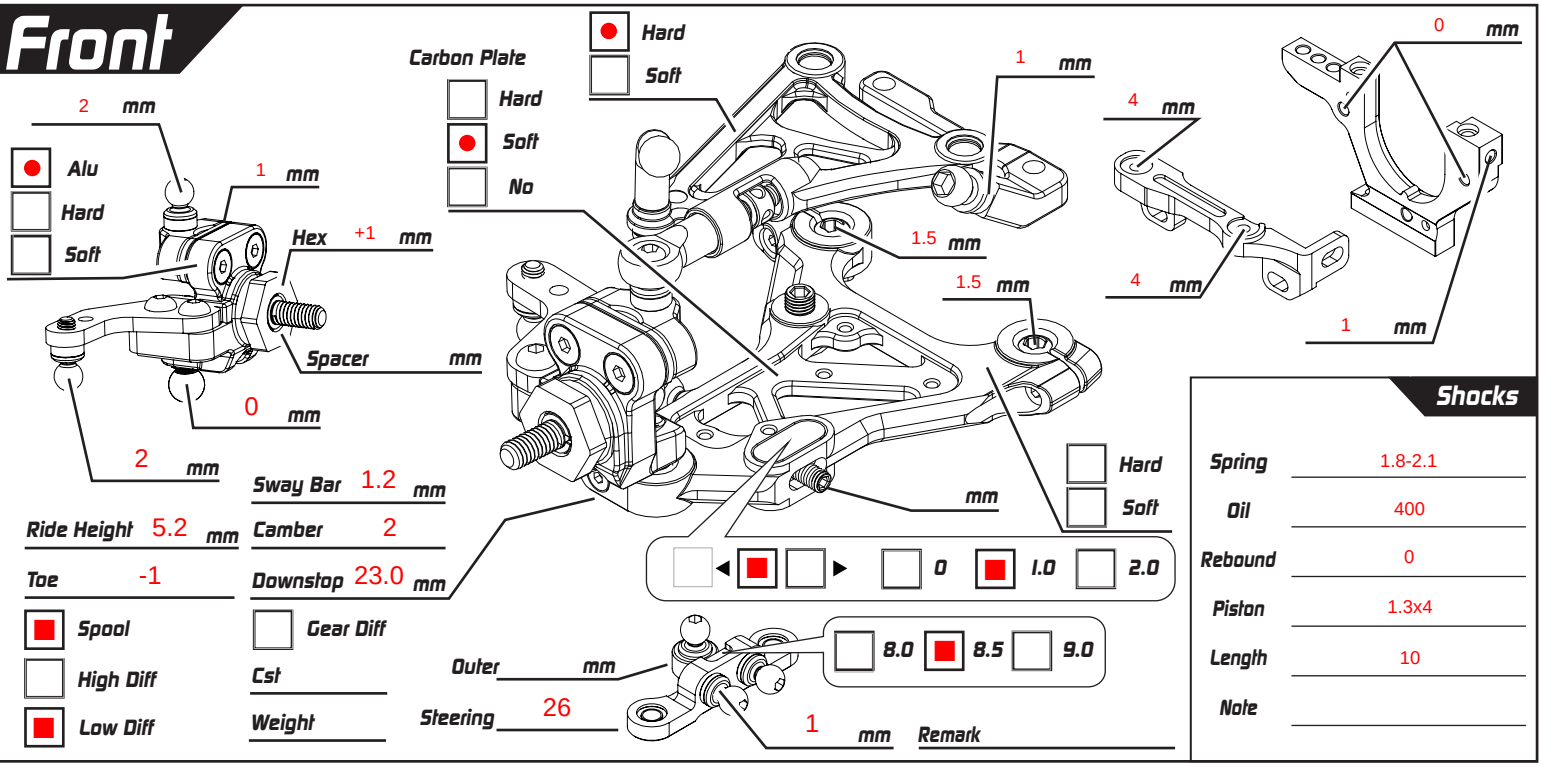

Ride Height	5.2 mm	Sway Bar	1.2 mm
Toe	-1	Camber	2
		Downstop	23.0 mm
Spool		Gear Diff	
High Diff		Cst	
Low Diff		Weight	

Remark

Shocks

Spring	1.8-2.1
Oil	400
Rebound	0
Piston	1.3x4
Length	10
Note	

Rear

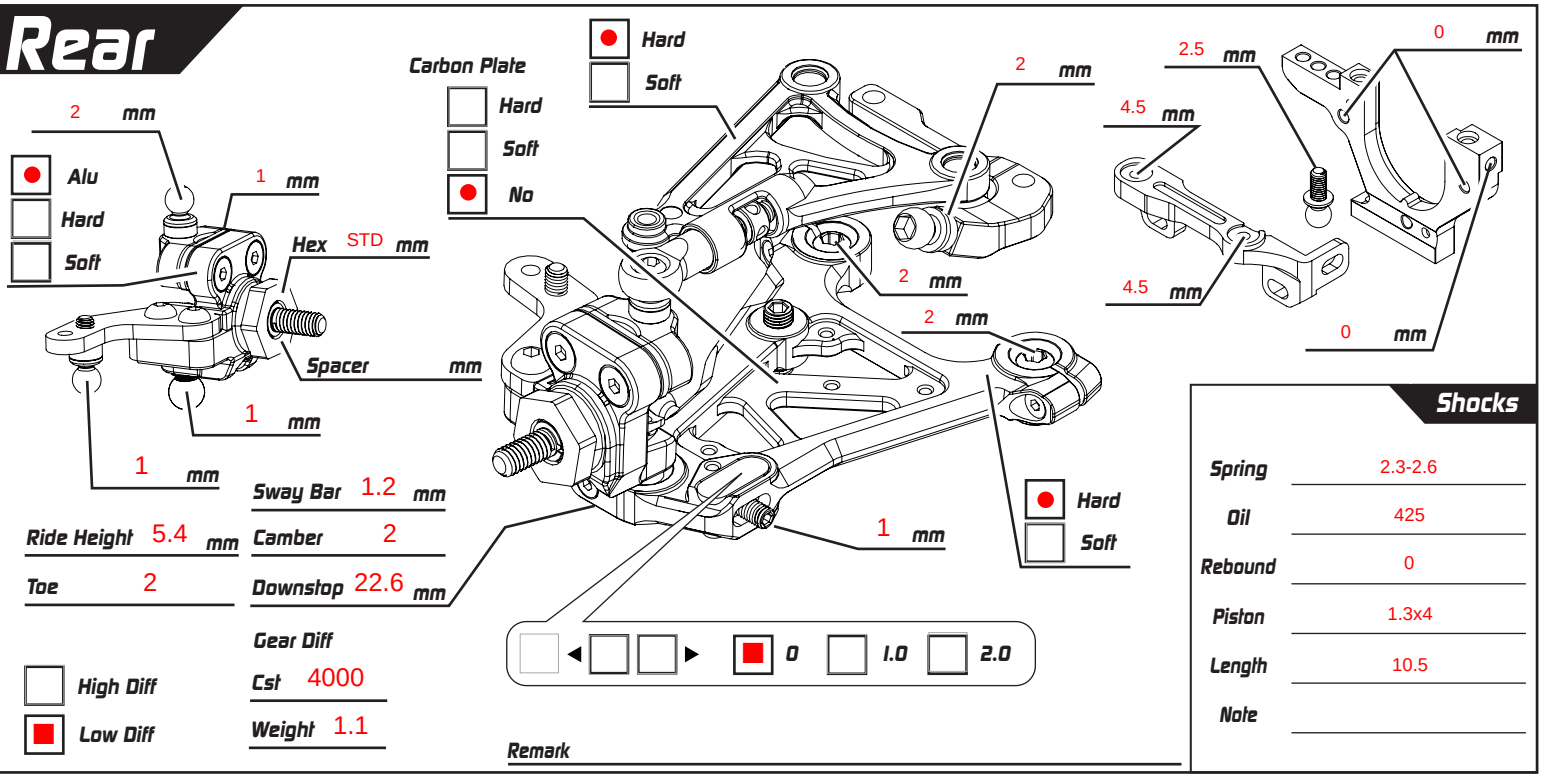

Ride Height	5.4 mm	Sway Bar	1.2 mm
Toe	2	Camber	2
		Downstop	22.6 mm
		Gear Diff	
High Diff		Cst	4000
Low Diff		Weight	1.1

Remark

Shocks

Spring	2.3-2.6
Oil	425
Rebound	0
Piston	1.3x4
Length	10.5
Note	

Weight g

Battery Oni 6600 Body MTB0415-L

Tires Handout Additive V3

ESC Orca Motor Orca 4.5

Spur 64 P/ 110 T Servo S15

Pinon 64 P/ 29 T FDR 7.206896

Servo Horn Height 18 mm

Weight g

Weight 10 g

Carbon

Alu
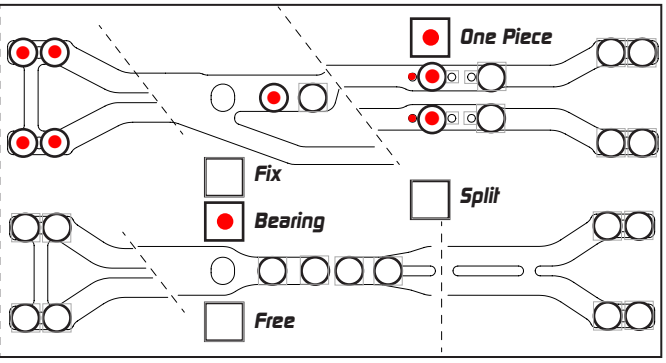
Weight 10 g