XPRESS EXECUTE XQ11 SET-UP SHEET

Driver	Default	Track Surface	Outdoor / Asphalt	Track Temperature	
Date		Track Traction	Medium	Result	Air Temperature
Track		Country		Best Lap	Humidity	Remark

Front

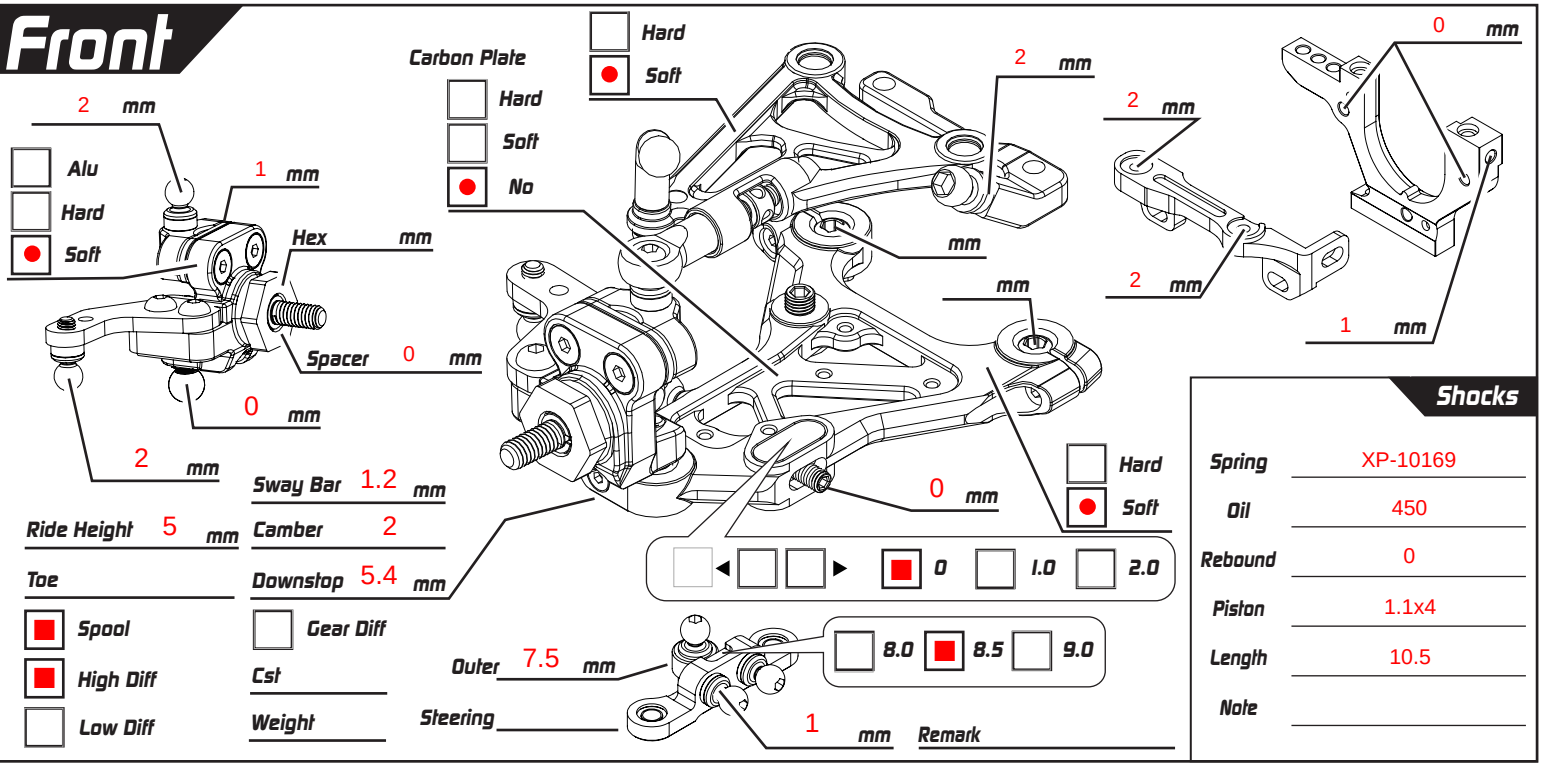

Sway Bar 1.2 mm
Ride Height 5 mm
Camber 2
Toe
Downstop 5.4 mm

- [ ] Spool
- [x] High Diff
- [ ] Low Diff
- [ ] Gear Diff

Cst
Weight

Shocks

Spring	XP-10169
Oil	450
Rebound	0
Piston	1.1x4
Length	10.5
Note	

Rear

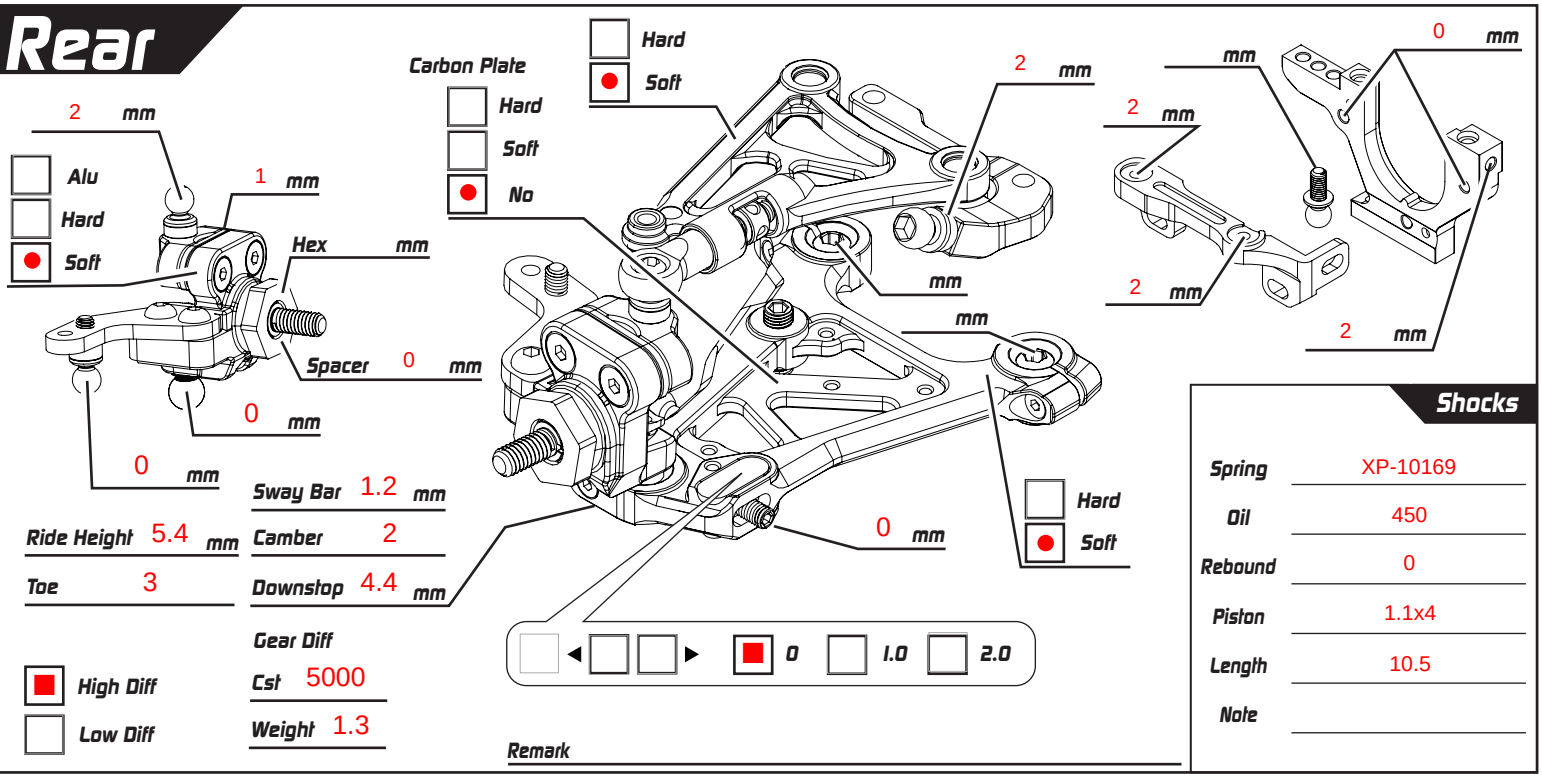

Sway Bar 1.2 mm
Ride Height 5.4 mm
Camber 2
Toe 3
Downstop 4.4 mm

- [x] High Diff
- [ ] Low Diff

Gear Diff
Cst 5000
Weight 1.3

Shocks

Spring	XP-10169
Oil	450
Rebound	0
Piston	1.1x4
Length	10.5
Note	
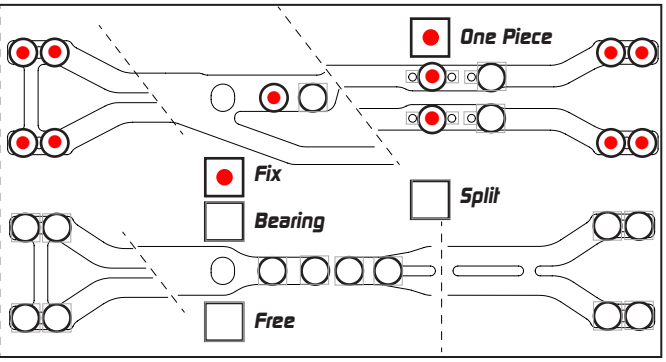
Weight g
Battery
Body
Tires
Additive
ESC
Motor
Spur P/ T
Pinon P/ T
Servo Horn Height mm
Servo
FDR NaN
Weight g
Weight g
Carbon
Alu
Weight g