XPRESS EXECUTE XQ11 SET-UP SHEET

Driver	Hay	Track Surface	Outdoor	Asphalt		Track Temperature	
Date	24/9/2023	Track Traction	Medium	Result	1st	Air Temperature	
Track	TRC	Country		Best Lap		Humidity	Remark

Front

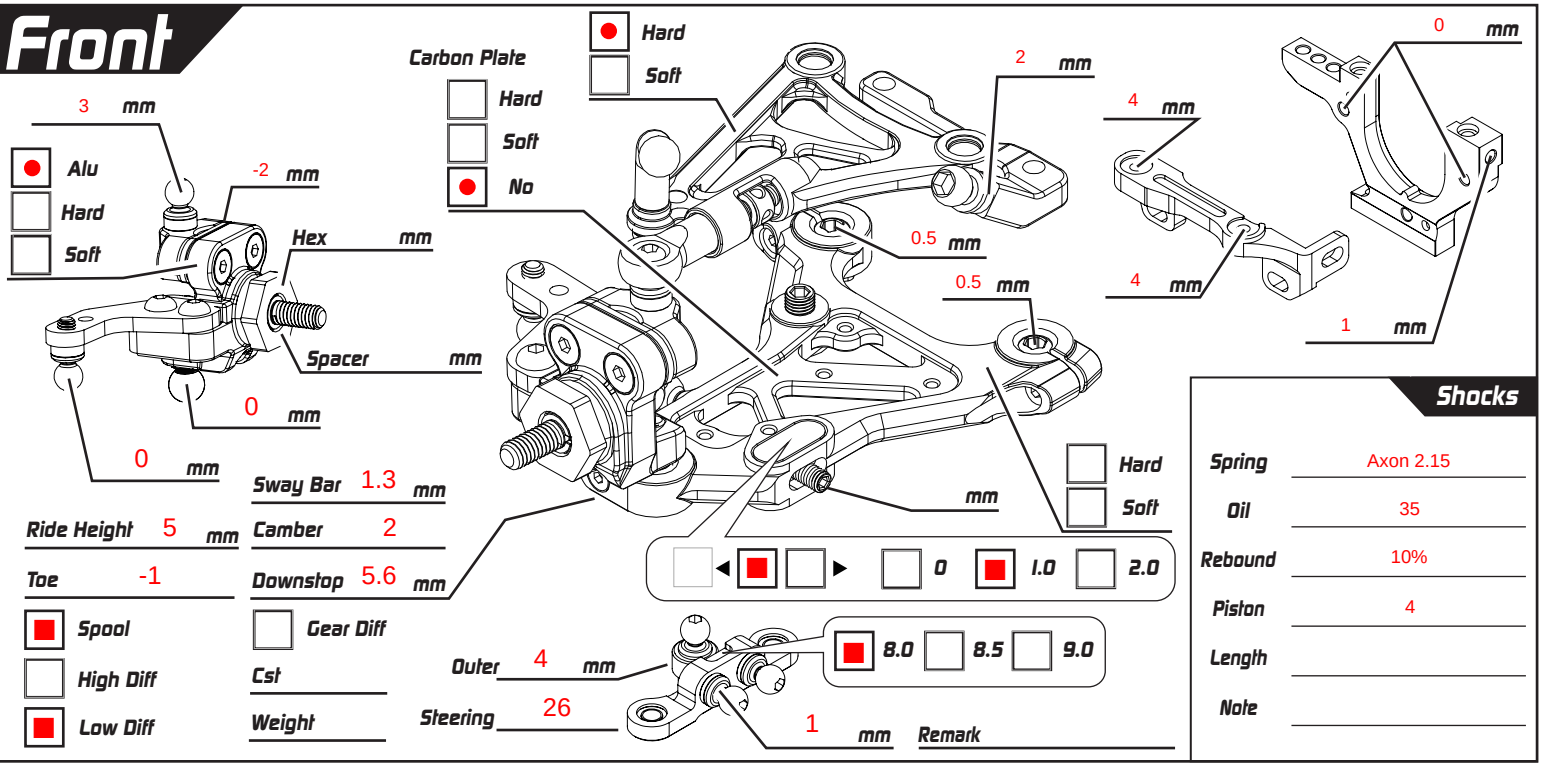

Sway Bar 1.3 mm
Ride Height 5 mm
Camber 2
Toe -1
Downstop 5.6 mm
Spool
High Diff
Low Diff
Gear Diff
Cst
Weight

Shocks

Spring	Axon 2.15
Oil	35
Rebound	10%
Piston	4
Length	
Note	

Rear

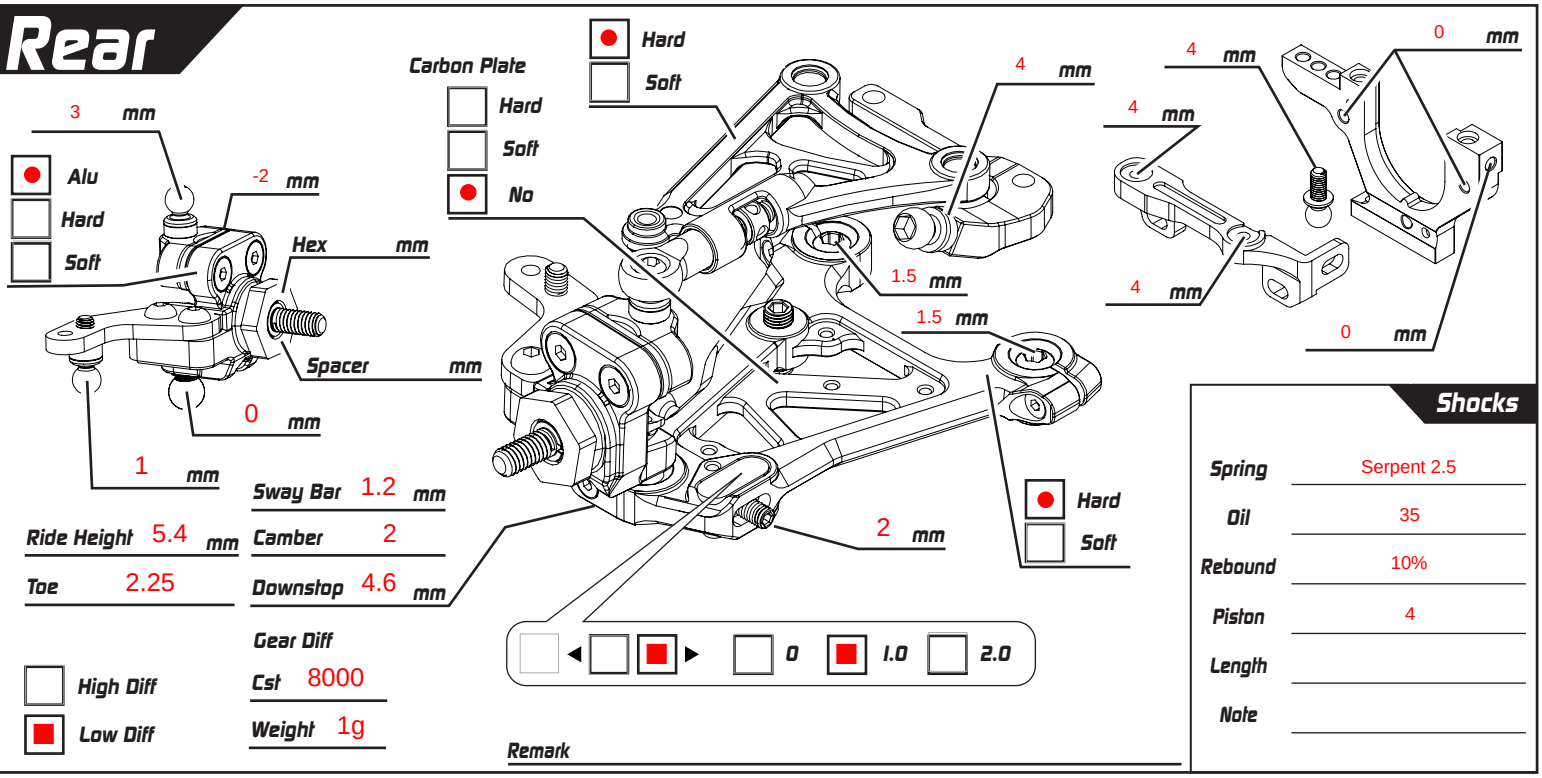

Sway Bar 1.2 mm
Ride Height 5.4 mm
Camber 2
Toe 2.25
Downstop 4.6 mm
Gear Diff
High Diff
Low Diff
Cst 8000
Weight 1g

Shocks
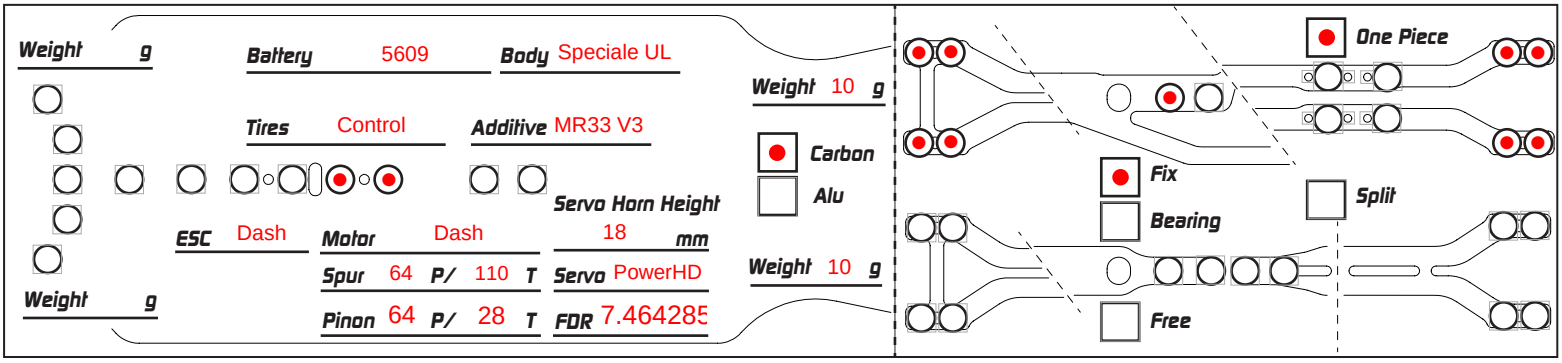
Spring	Serpent 2.5
Oil	35
Rebound	10%
Piston	4
Length	
Note