XPRESS EXECUTE XQ11R SET-UP SHEET

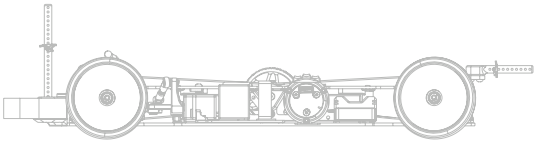

Driver	Yugo Nagashima	Track Surface	Indoor / Outdoor / Asphalt / ☑ Carpet			Track Temperture	
Date	Speed king tour rd.6	Track Traction	Mid	Result	1st	Air Temperture	
Track	World jam racing	Country	Japan	Best Lap		Humidity	
Remark							

Front

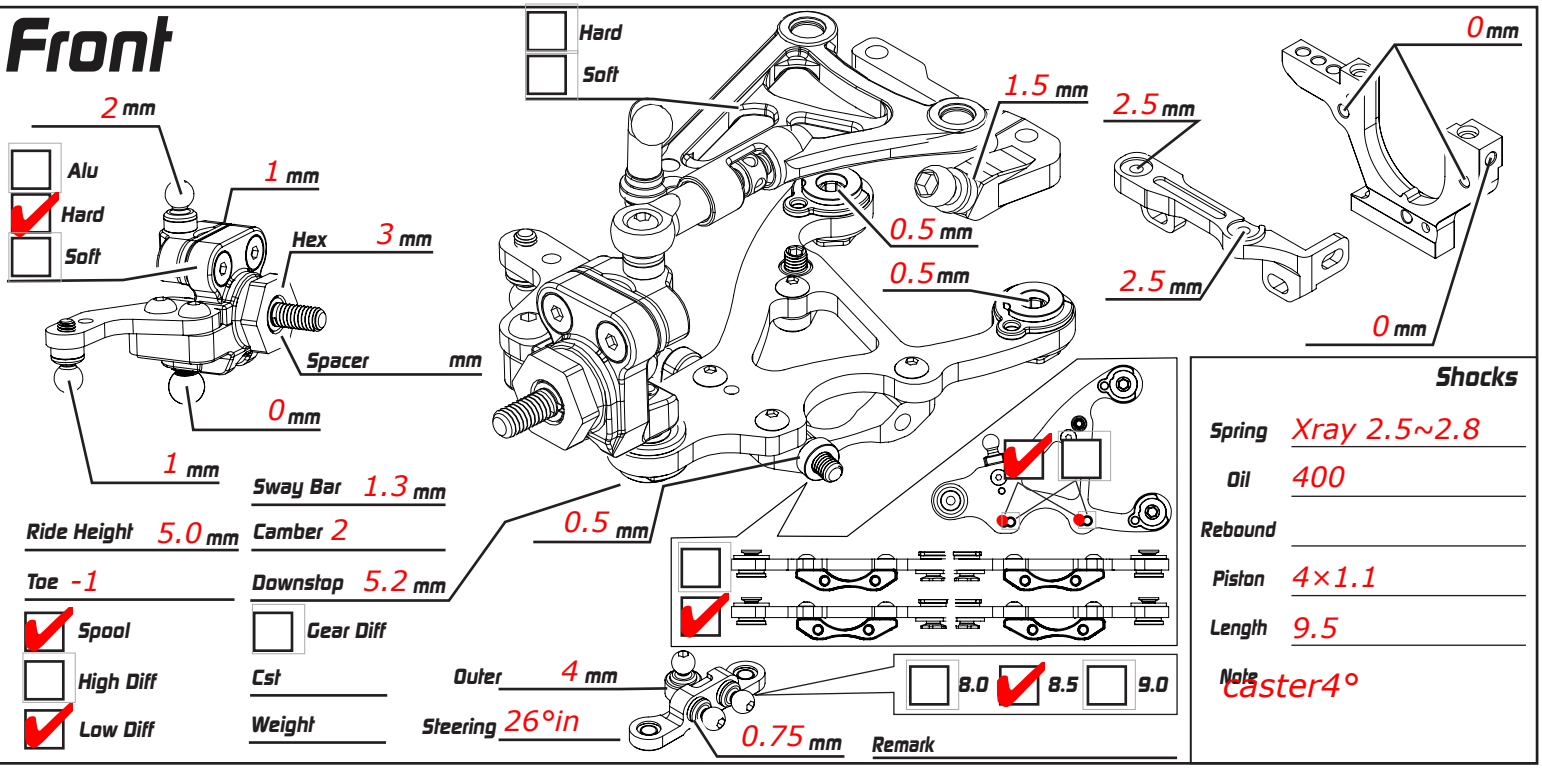

Sway Bar	1.3 mm	Ride Height	5.0 mm
Camber	2	Toe	-1
Downstop	5.2 mm	☑ Spool	☐ Gear Diff
☐ High Diff	Cst	☑ Low Diff	Weight
Outer	4 mm	Steering	26°in

Shocks

Spring	Xray 2.5~2.8
Oil	400
Rebound	
Piston	4×1.1
Length	9.5
Note	caster4°

Rear

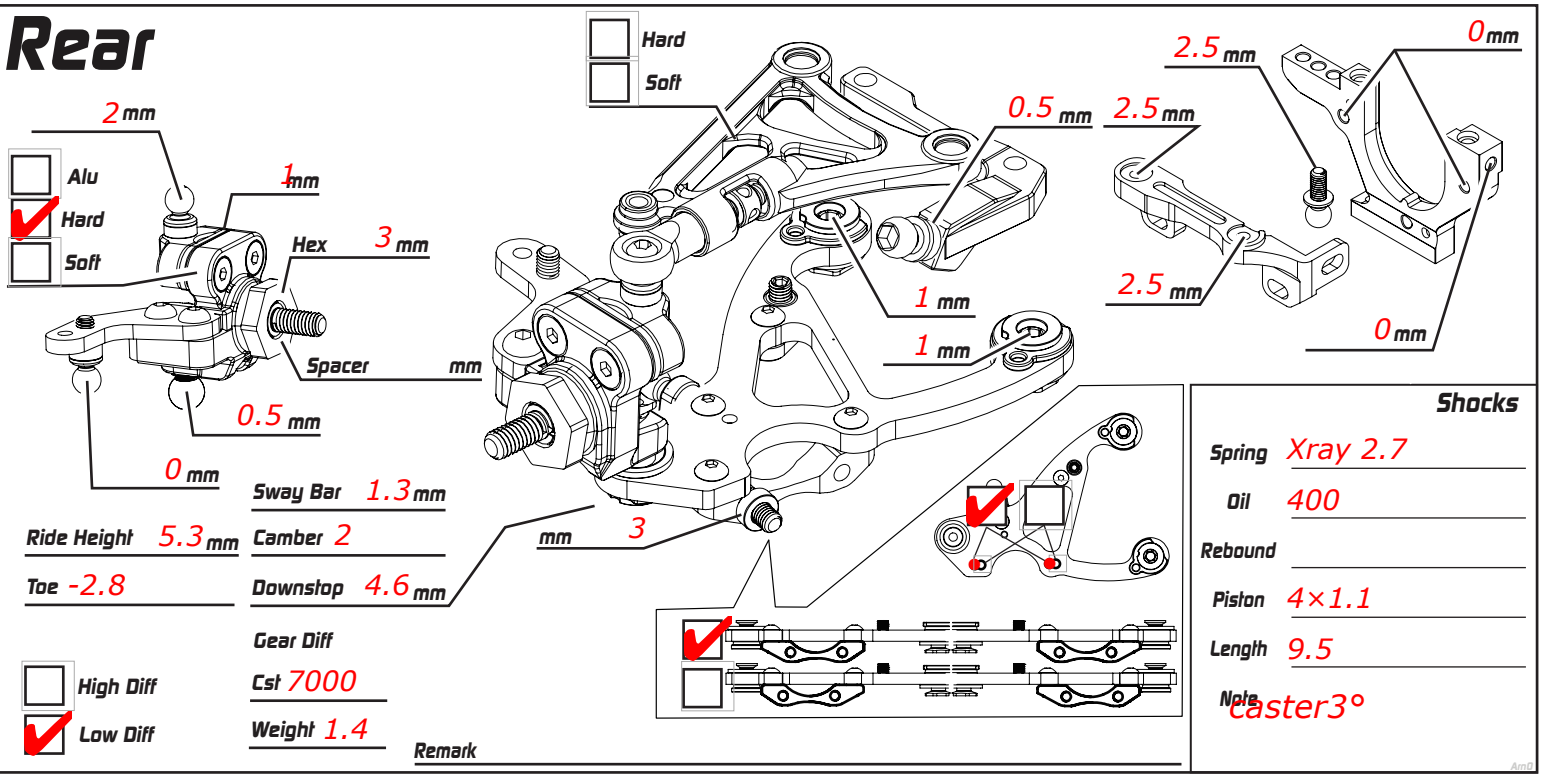

Sway Bar	1.3 mm	Ride Height	5.3 mm
Camber	2	Toe	-2.8
Downstop	4.6 mm	Gear Diff	
☐ High Diff	Cst	7000	☑ Low Diff
Weight	1.4		

Shocks

Spring	Xray 2.7
Oil	400
Rebound	
Piston	4×1.1
Length	9.5
Note	caster3°

Weight g	Battery	fido 6800mAh	Servo s15xp
	Body	twister ul	Tires Cpx28
	Wing	Rush type-c 0.5mm	Additive Houns out
	ESC		Servo Horn Height mm
Weight g	Motor	zombie 5.0t	Timing 32
	Pinon	28 T	Spur 110 T / P FDR 7.464

Weight 5 g

☐ Carbon
☑ Alu
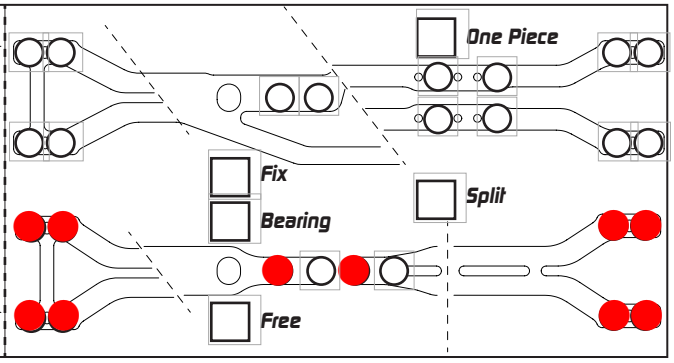
Weight 5 g