XPRESS EXECUTE XQ1R SET-UP SHEET

Driver	Felix Law	Track Surface				Track Temperature	
Date	7/20/25	Track Traction	med	Result		Air Temperature	
Track	CS RC raceway	Country	USA	Best Lap	13.2	Humidity	
Remark							

Front

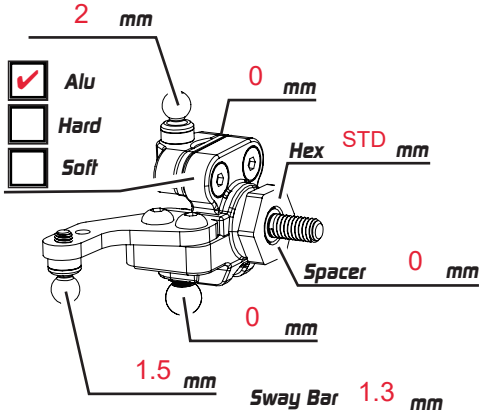

- [x] Alu
- [ ] Hard
- [ ] Soft

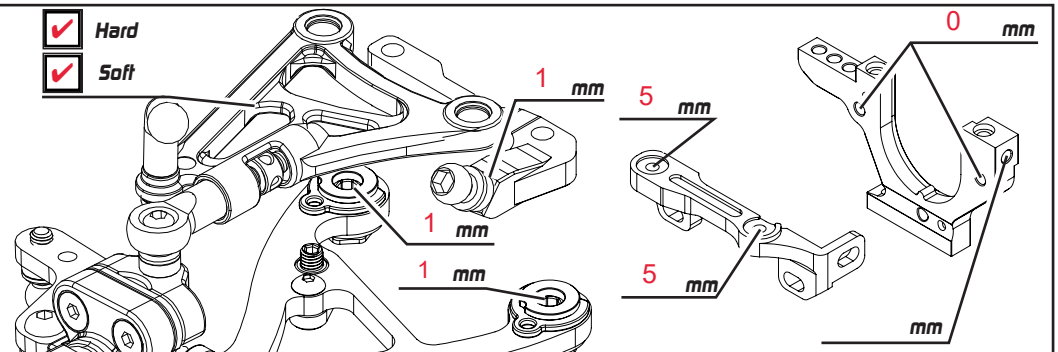

- [x] Hard
- [x] Soft

Sway Bar	1.3 mm	Ride Height	4.8 mm
Camber	2	Toe	0.5
Downstop	6 mm		

- [x] Spool
- [x] High Diff
- [ ] Low Diff
- [ ] Gear Diff

Cst	
Weight	
Steering	

Outer 8.5 mm

1 mm

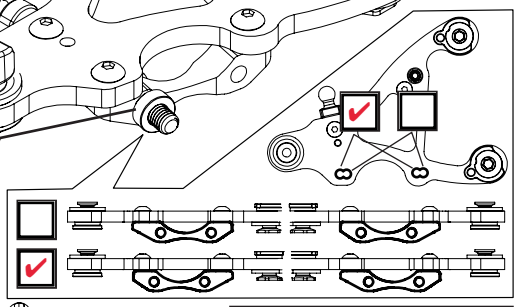

- [ ]
- [x]

- [x] 8.0
- [ ] 8.5
- [ ] 9.0

Remark: cut upper arm

Shocks

Spring	xray 2.5 2.8
Oil	400
Rebound	0
Piston	4
Length	9
Note	

Rear

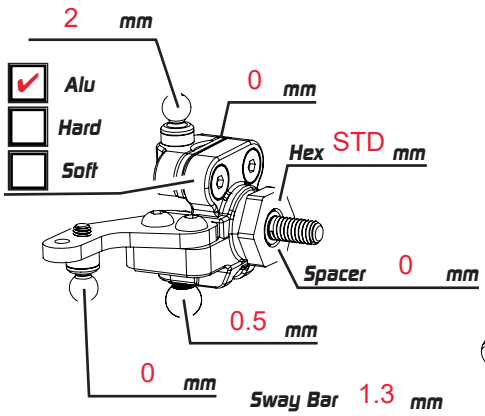

- [x] Alu
- [ ] Hard
- [ ] Soft

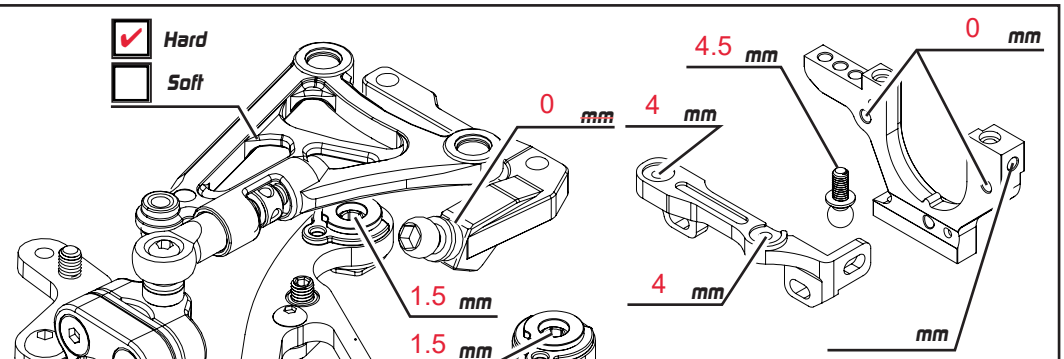

- [x] Hard
- [ ] Soft

Sway Bar	1.3 mm	Ride Height	5 mm
Camber	2	Toe	2.5
Downstop	5.8 mm		

- [x] High Diff
- [ ] Low Diff

Gear Diff

Cst	5k
Weight	

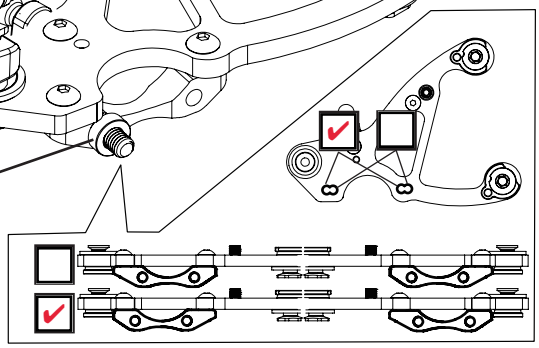

- [ ]
- [x]

Remark: Cut upper arm

Shocks

Spring	Xray 2.7
Oil	400
Rebound	0
Piston	4
Length	9
Note	

Weight t upper ar g

Battery 4800 Body JC

Tires D36 Additive yellow V3

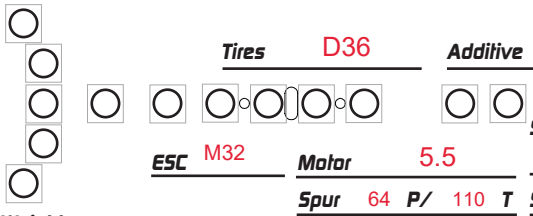

Weight g

ESC M32 Motor 5.5

Spur 64 P/ 110 T

Pinon 64 P/ 28 T

Servo Horn Height 18 mm

Servo PGS

FDR 7.46

Weight g

Weight g

- [ ] Carbon
- [x] Alu

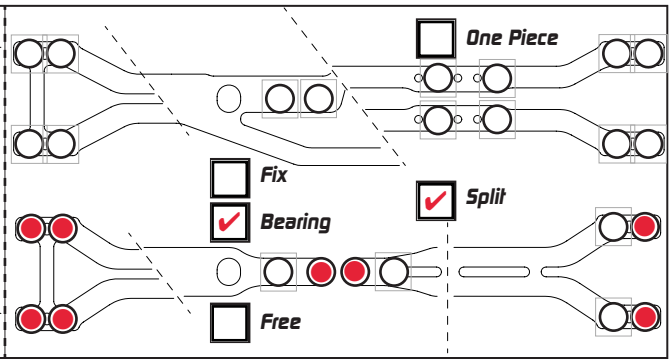

- [ ] One Piece
- [ ] Fix
- [x] Bearing
- [ ] Free
- [x] Split