XPRESS EXECUTE XQ1R SET-UP SHEET

Driver	Eric Lam	Track Surface	Asphalt			Track Temperature	
Date	25/5/2025	Track Traction	Medium Low	Result	A1	Air Temperature	29
Track	TRC	Country	Hong Kong	Best Lap	15.8	Humidity	65%	Remark	

Front

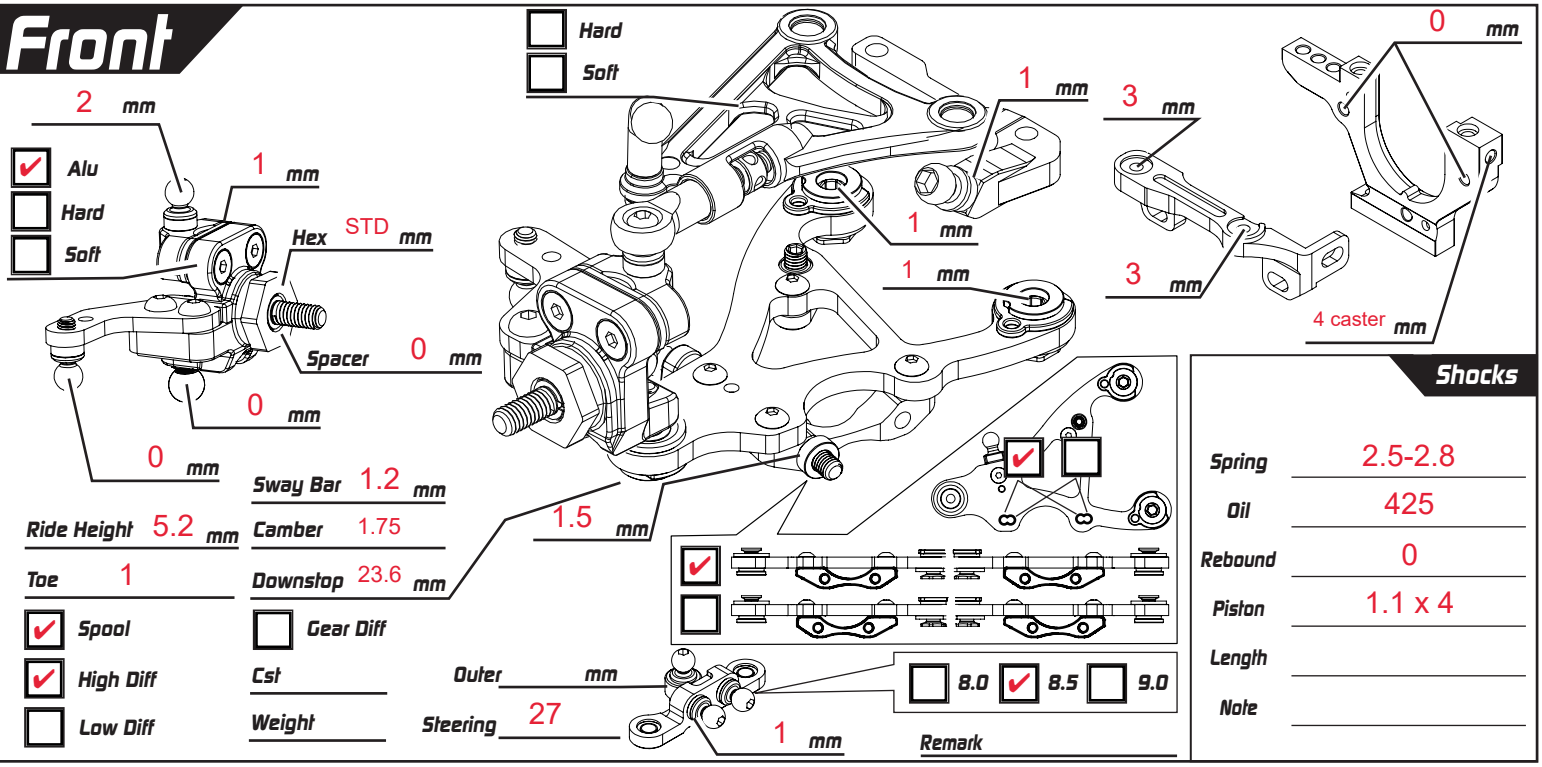

Sway Bar	1.2 mm		
Ride Height	5.2 mm	Camber	1.75
Toe	1	Downstop	23.6 mm
☑ Spool		☐ Gear Diff	
☑ High Diff		Cst	
☐ Low Diff		Weight	
Outer	mm	Steering	27
Remark			

Shocks

Spring	2.5-2.8
Oil	425
Rebound	0
Piston	1.1 x 4
Length	
Note	

Rear

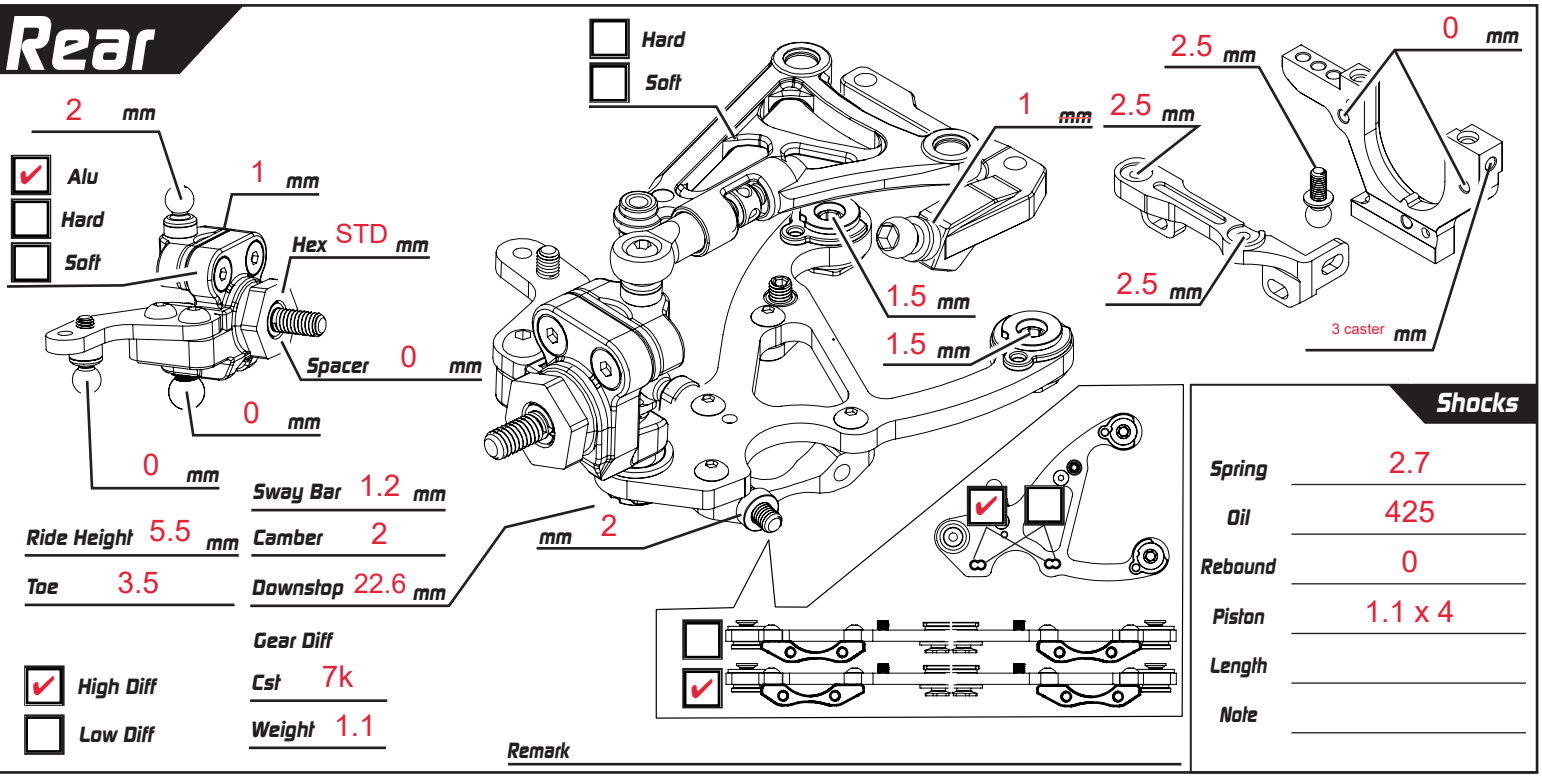

Sway Bar	1.2 mm		
Ride Height	5.5 mm	Camber	2
Toe	3.5	Downstop	22.6 mm
		Gear Diff	
☑ High Diff		Cst	7k
☐ Low Diff		Weight	1.1
Remark			

Shocks

Spring	2.7
Oil	425
Rebound	0
Piston	1.1 x 4
Length	
Note	

Weight g

Battery

Body MTB0415UL

Tires Xpress D40

Additive V3 Black

Weight 10 g

☑ Carbon

☐ Alu

Weight 10 g

ESC ORCA

Motor ORCA 5T

Servo Horn Height 18.5 mm

Spur 64 P/ 108 T

Servo GTS2

Pinon 64 P/ 30 T

FDR 6.84
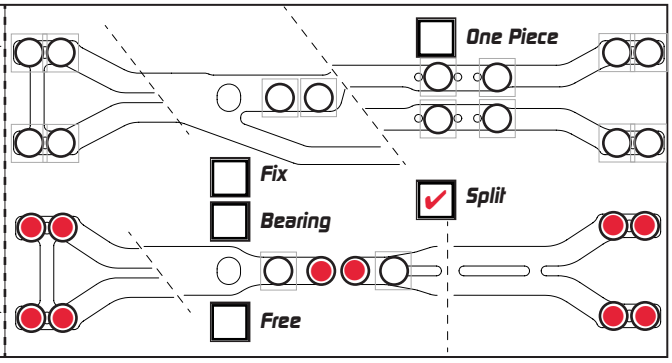
Weight g