XPRESS EXECUTE XQ1R SET-UP SHEET

Driver	Yoshi Yanagisawa	Track Surface	Carpet			Track Temperature	
Date	2025JMRCA	Track Traction	Hi	Result	2	Air Temperature	
Track	Tukuba RC paku	Country		Best Lap	9.3	Humidity	
						Remark	

Front

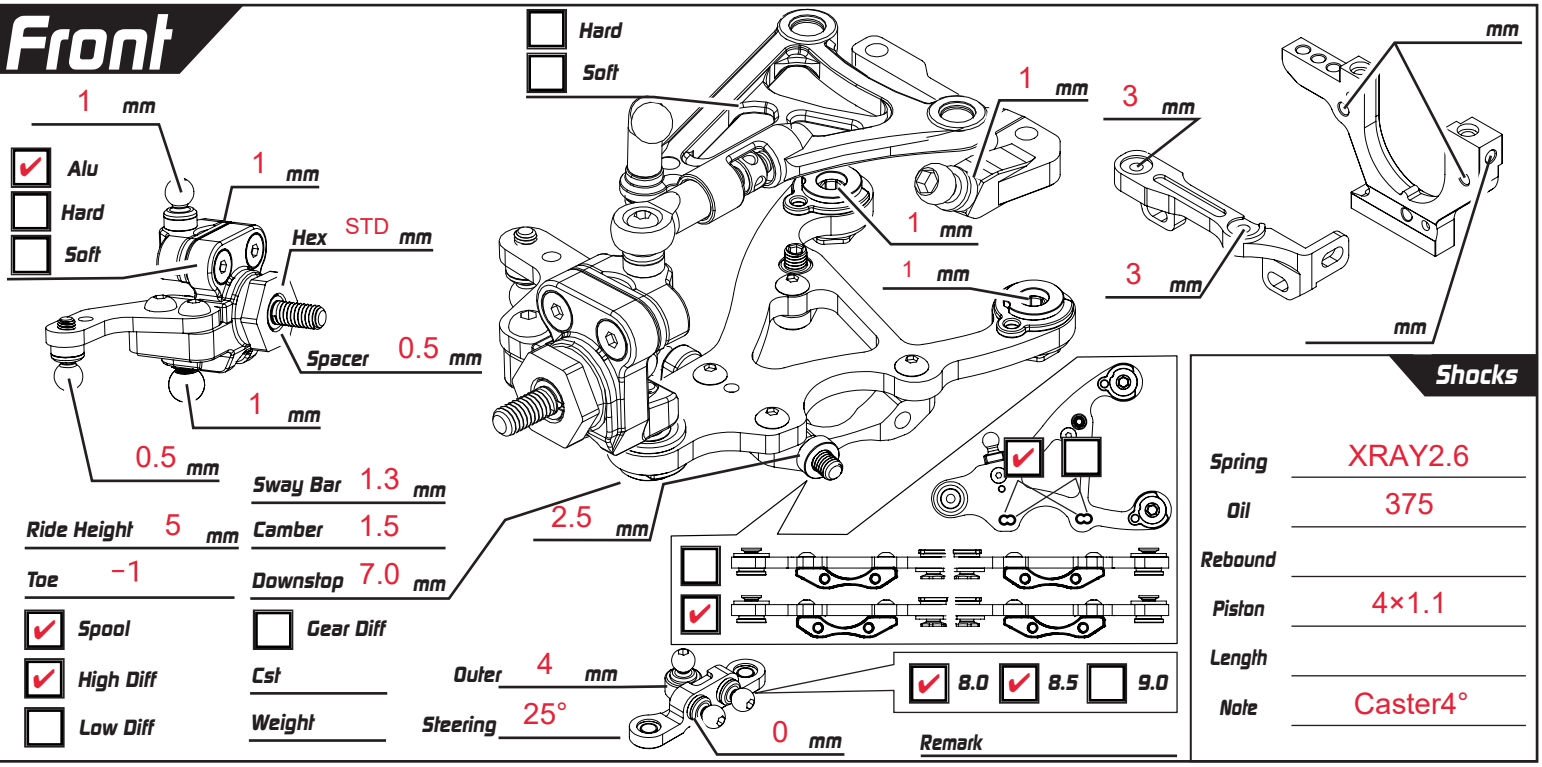

Sway Bar	1.3 mm		
Ride Height	5 mm	Camber	1.5
Toe	−1	Downstop	7.0 mm
☑ Spool		☐ Gear Diff	
☑ High Diff		Cst	
☐ Low Diff		Weight	
Outer	4 mm		
Steering	25°		
Remark			

Shocks

Spring	XRAY2.6
Oil	375
Rebound	
Piston	4×1.1
Length	
Note	Caster4°

Rear

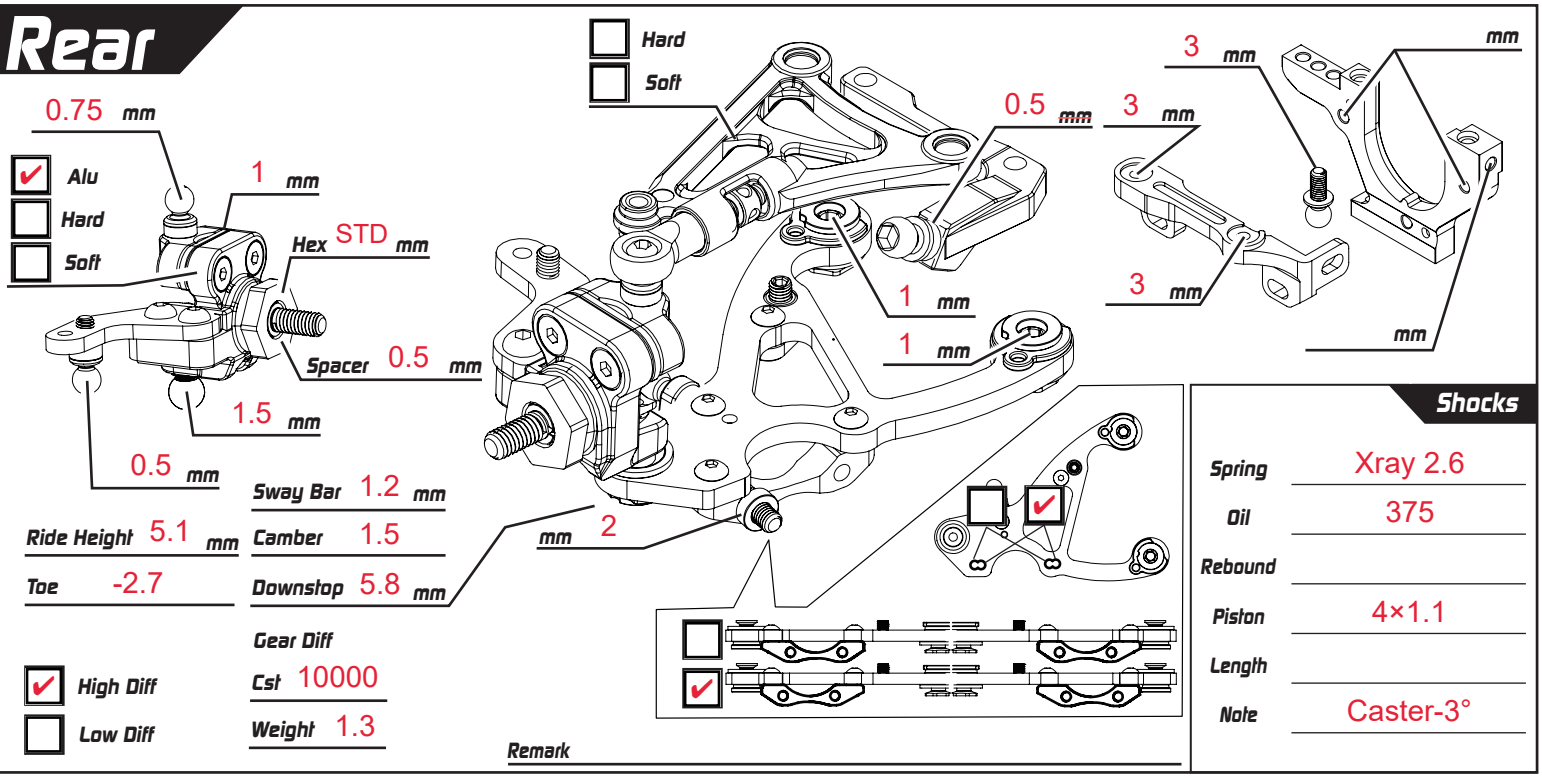

Sway Bar	1.2 mm		
Ride Height	5.1 mm	Camber	1.5
Toe	-2.7	Downstop	5.8 mm
		Gear Diff	
☑ High Diff		Cst	10000
☐ Low Diff		Weight	1.3
Remark			

Shocks

Spring	Xray 2.6
Oil	375
Rebound	
Piston	4×1.1
Length	
Note	Caster-3°

Weight g

Battery Fido4000 Body Twistrler ul

Tires Additive

Weight 15 g

☐ Carbon
☐ Alu

Servo Horn Height mm

ESC Motor

Spur P/ T Servo

Pinon P/ T FDR 0.00

Weight 15 g
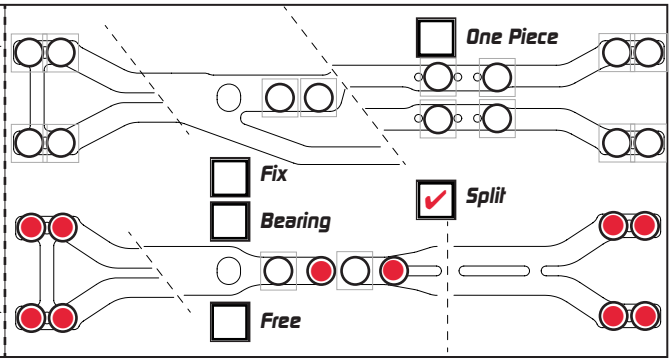
Weight g