XPRESS EXECUTE XQIIRR

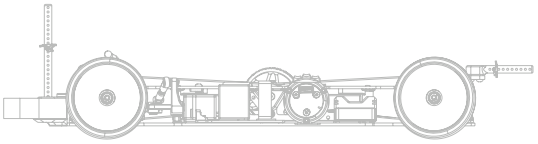

Driver	Felix Law	Track Surface	Indoor / Outdoor / Asphalt / Carpet			Track Temperture	
Date	02/22/26	Track Traction	Low			Air Temperture	
Track	Valkaria RC Raceway	Country	Grant Valkaria FL	Best Lap	12.6	Humidity	
						Remark	

Front

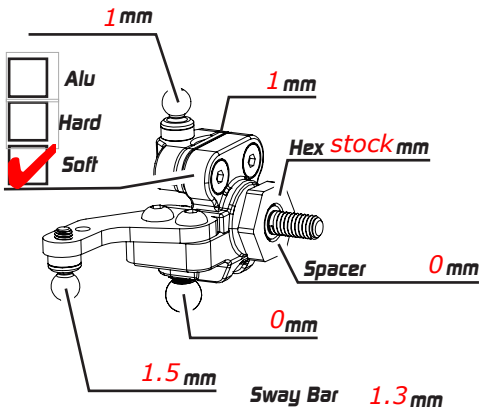

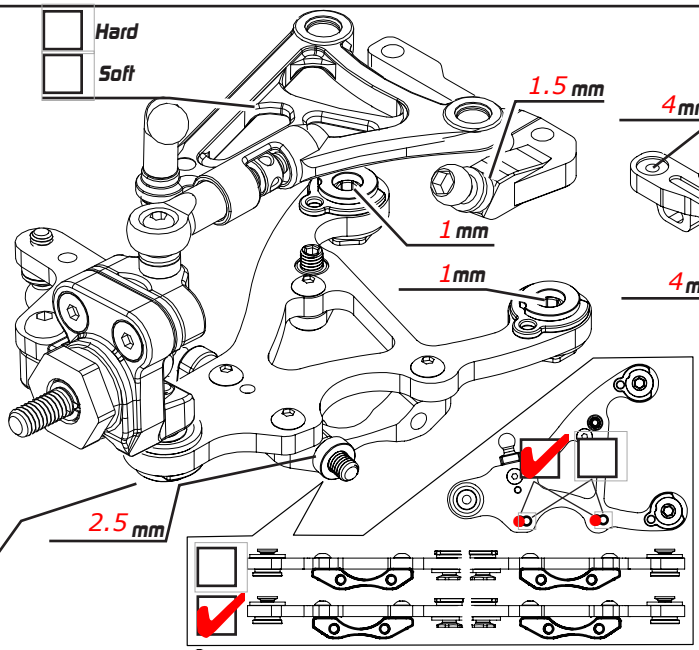

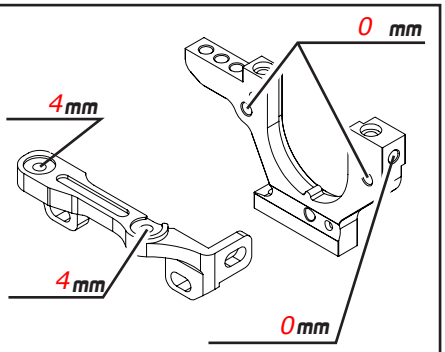

Sway Bar	1.3 mm	Ride Height	4.8 mm
Camber	2	Toe	+1
Downstop	5.6 mm	Spool	
Gear Diff		High Diff	✓
Cst		Low Diff	
Weight			

Outer 9 mm
Steering 28
1 mm

☐ 8.0 ☐ 8.5 ☐ 9.0

Remark camberlink stiffener

Shocks

Spring	Xray 2.7
Oil	300
Rebound	
Piston	4x1.1
Length	
Note	Caster 4 degree

Rear

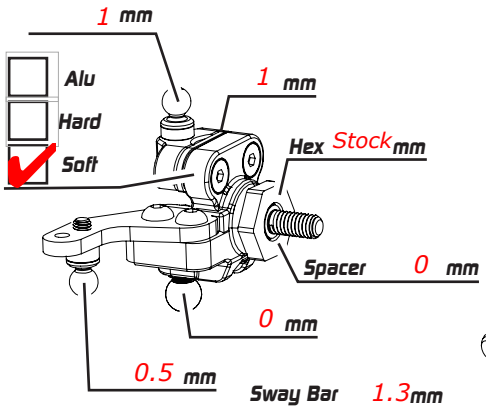

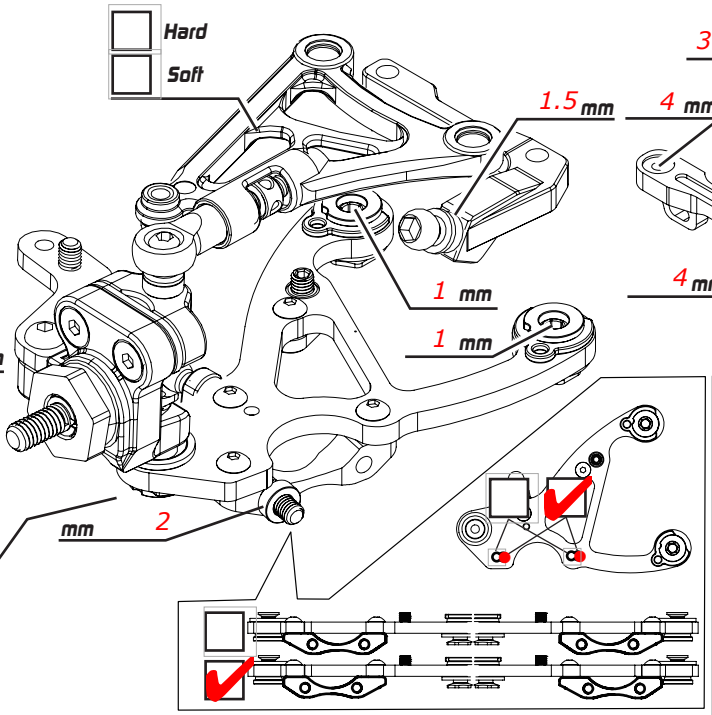

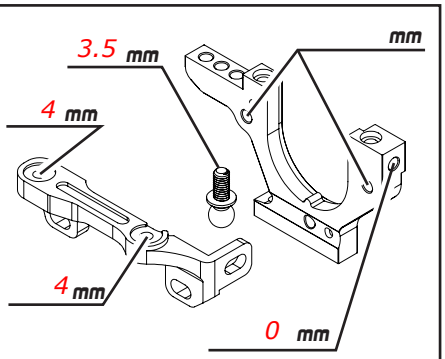

Sway Bar	1.3mm	Ride Height	5.2 mm
Camber	2	Toe	4
Downstop	5 mm	Gear Diff	
High Diff	✓	Cst	6k
Low Diff		Weight	

Remark Camberlink stiffener

Shocks

Spring	xray 2.7
Oil	300
Rebound	
Piston	4x1.1
Length	
Note	Caster 0 degree

Weight	g	Battery	6600
		Body	Speciale
		Wing	JC
		ESC	HW
		Motor	4.5
Weight	g	Pinon	20 T Spur 80 T / 48 P

Servo	PGS
Tires	D36
Additive	Yellow v3
Servo Horn Height	17 mm
Timing	20
FDR	7.6

Weight 10g

☐ Carbon
✓ Alu
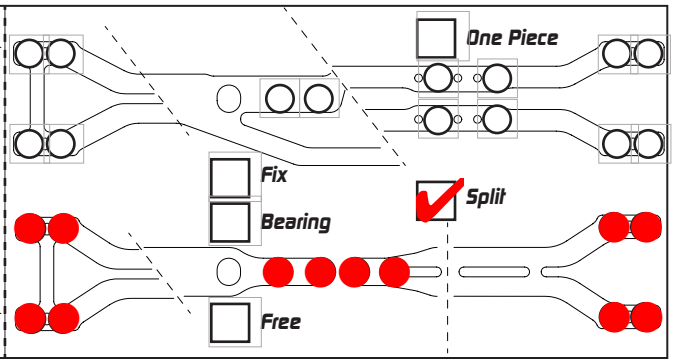
Weight 10g