XPRESS EXECUTE XQ10 SET-UP SHEET

Driver		Track Surface	Outdoor Asphalt	Track Temperture			
Date		Track Traction	Medium	Result		Air Temperature	
Track	TRC	Country	HK	Best Lap		Humidity		Remark	

Front / Rear

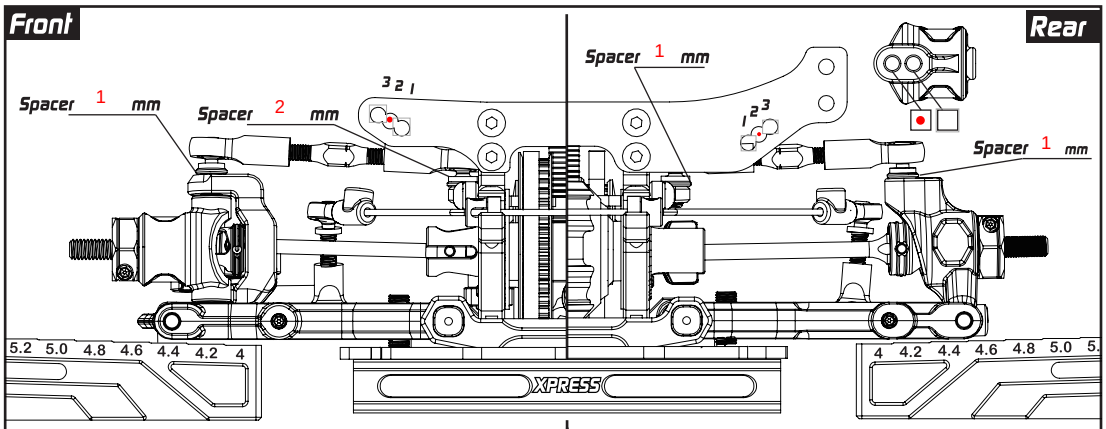

	Front	Rear
Camber Link		Camber Link
C-Hub	☐ M ☒ H	
Steering Block	☐ M ☒ H	
Suspension Arm	☐ M ☒ H	
Hex Offset	4.5 mm	4.5 mm
Camber	2 °	1.5 °
Ride Height	4.9 mm	5.3 mm
DownStop	5.6 mm	4.6 mm
Sway Bar	1.3 mm	1.3 mm
Rear Hub		☐ M ☒ H
Suspension Arm		☐ M ☒ H

Optional — On-Power Control System

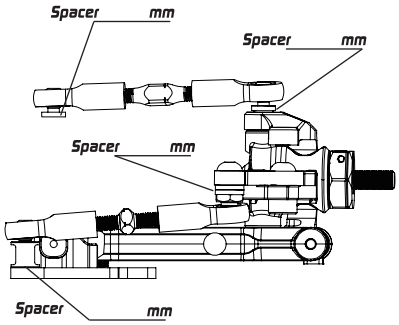

Hex Offset	mm
Camber	°
Ride Height	mm
DownStop	mm
Sway Bar	1.2 mm
Steering Block	☐ M ☐ H
Suspension Arm	☐ M ☐ H

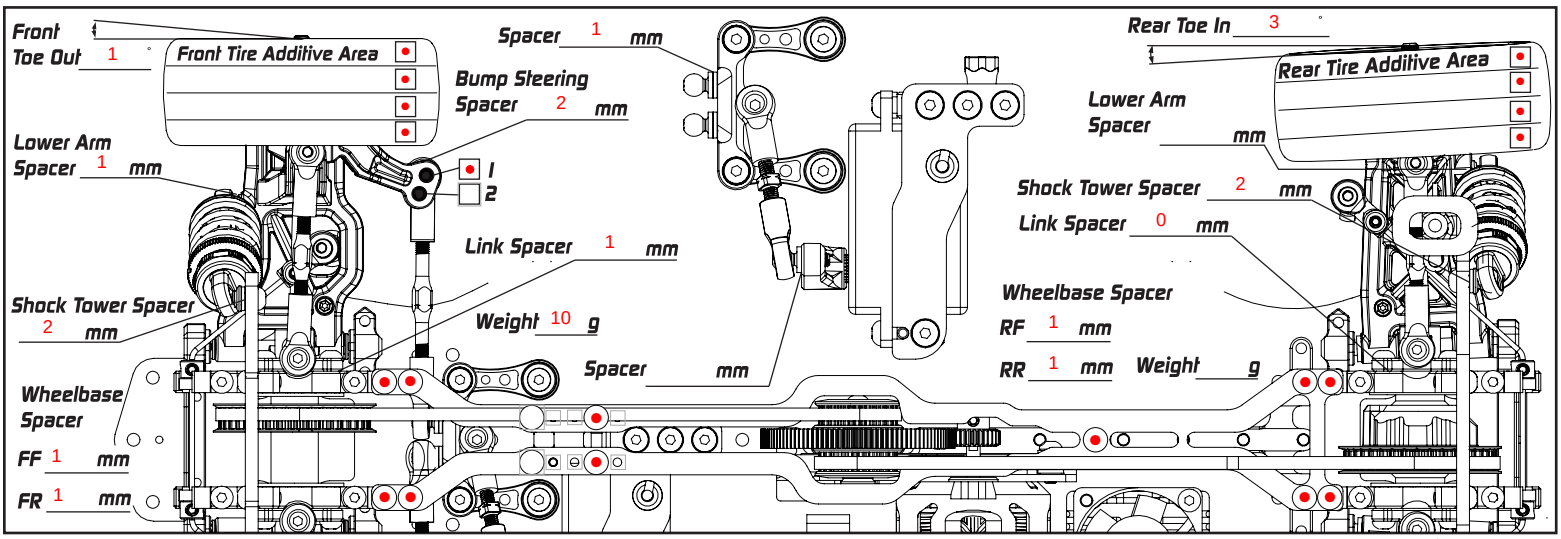

Suspension Mount Setup

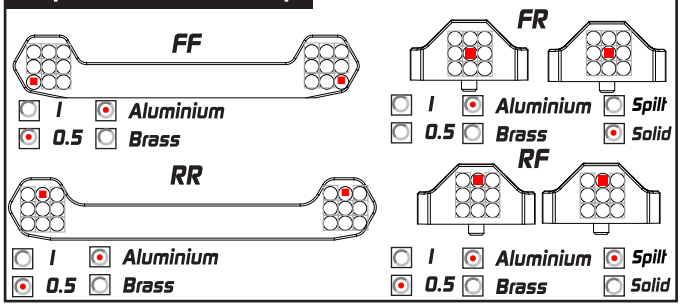

	FF	FR	RR	RF
1	☐	☐	☐	☐
Aluminium	☒	☒	☒	☒
0.5	☒	☐	☒	☒
Brass	☐	☐	☐	☐
Spilt		☐		☐
Solid		☒		☒

Flex Control

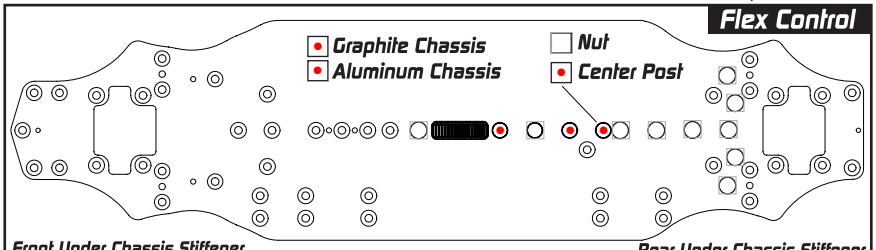

- ☒ Graphite Chassis
- ☒ Aluminum Chassis
- ☐ Nut
- ☒ Center Post

Front Under Chassis Stiffener
- ☒ None
- ☐ Graphite
- ☐ Brass

- ☒ Standard Battery
- ☐ Short Battery (Forward Position)
- ☐ Short Battery (Backward Position)

Rear Under Chassis Stiffener
- ☒ None
- ☐ Graphite
- ☐ Brass

Damper Setup

	Front	Rear
Spring	2.5-2.8	XP-10170
Oil	400	400
Rebound	25	25
Piston	4	4
Length	9.5	9.5
Foam Insert	☐	☐
Hole In Cap	☐	☐

Transmission Setup

	Front	Rear
	Spool	Gear Diff
Oil		7000
Weight	g	1.3 g
Position	High	High

Others

Servo	powerHD	Tires	XPRESS 40X
Esc	orca oe1	Additive	
Motor	orca 4.5T	Body	twister 0.5
Spur	64 P/ 110 T	Rear Wing	
Pinon	64 P/ 28 T	FDR	7.464