XPRESS EXECUTE XQ10 SET-UP SHEET

Driver	Masaya Okazaki	Track Surface	Outdoor / Asphalt	Track Temperture			
Date		Track Traction	Medium	Result		Air Temperature	
Track	IFS	Country		Best Lap		Humidity	Remark

Front

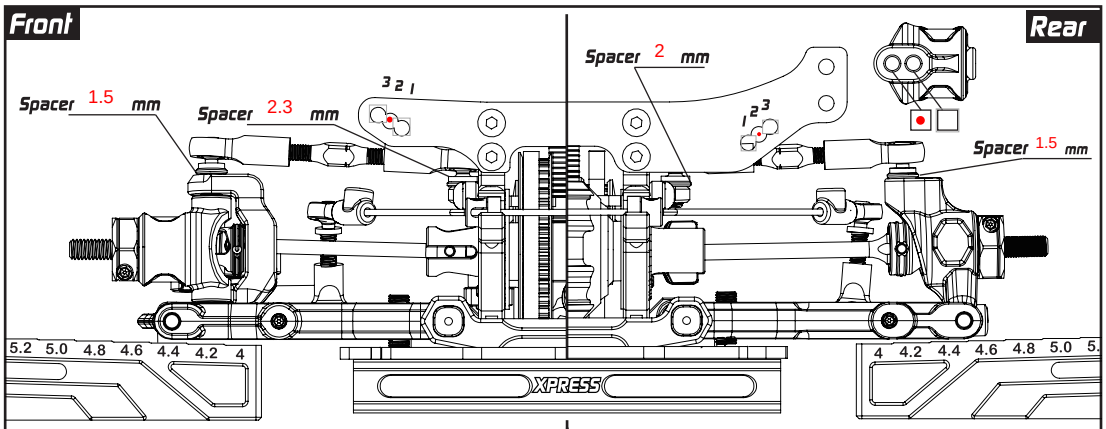

Rear

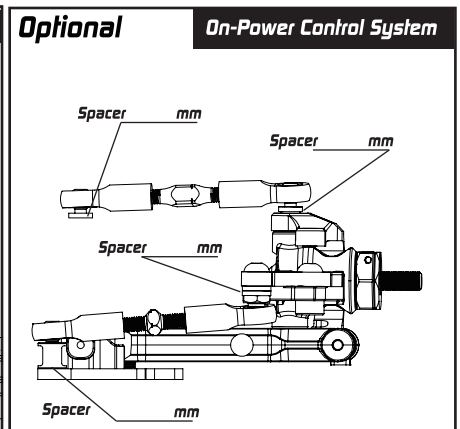

	Front	Rear
Hex Offset	4.25 mm	5 mm
Camber	1.5 °	2 °
Ride Height	5.1 mm	6 mm
DownStop	9.5 mm	8.5 mm
Sway Bar	1.3 mm	1.3 mm

Camber Link: ☐ M ☐ H

C-Hub: ☐ M ☐ H

Steering Block: ☐ M ☐ H

Suspension Arm: ☐ M ☐ H

Rear Hub: ☐ M ☐ H

Suspension Arm: ☐ M ☐ H

Camber Link: ☐ M ☐ H

Optional — On-Power Control System

Hex Offset	mm
Camber	°
Ride Height	mm
DownStop	mm
Sway Bar	1.2 mm

Steering Block: ☐ M ☐ H

Suspension Arm: ☐ M ☐ H

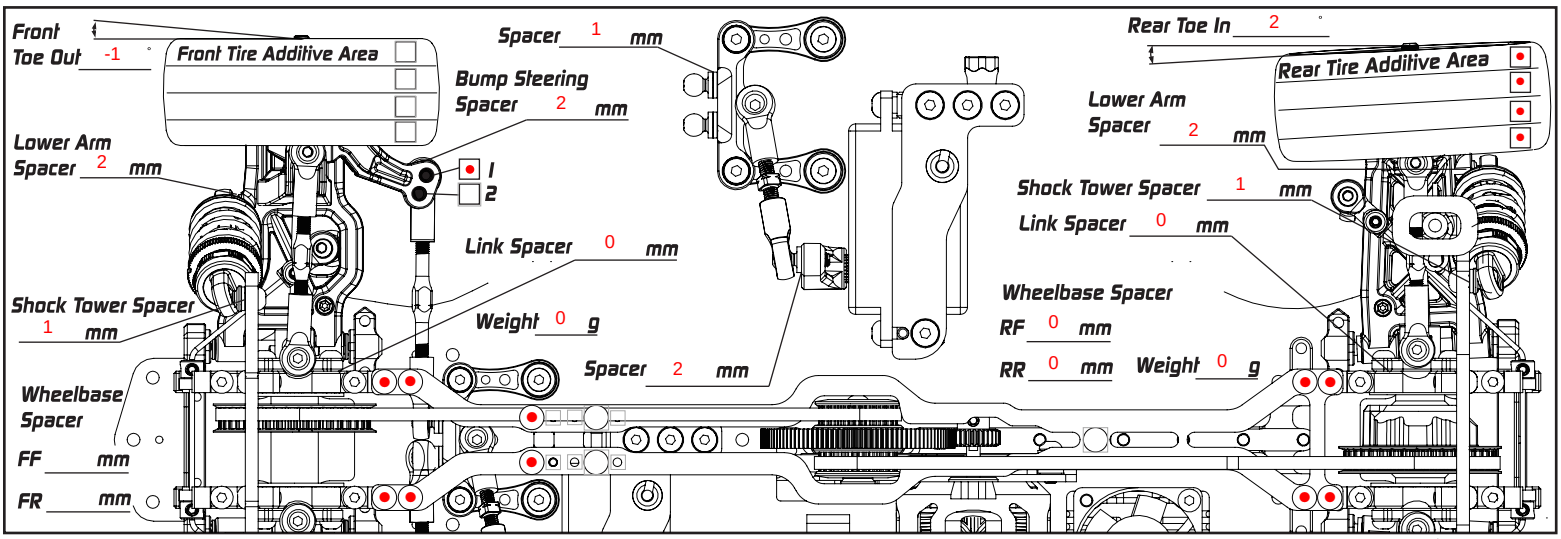

Suspension Mount Setup

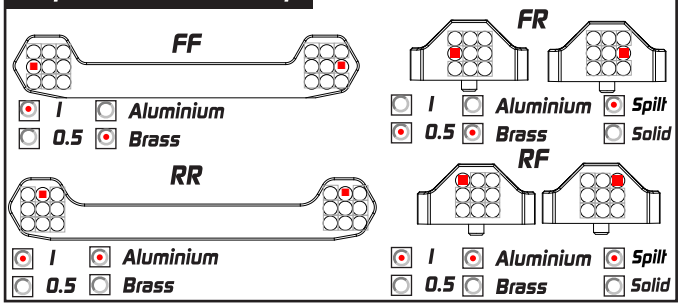

Flex Control

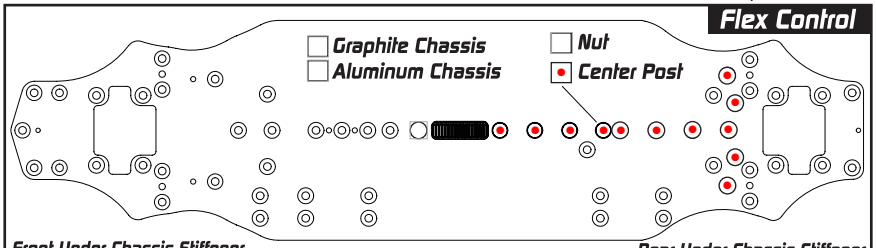

☐ Graphite Chassis ☐ Aluminum Chassis

☐ Nut ☐ Center Post

Front Under Chassis Stiffener: ☐ None ☐ Graphite ☐ Brass

☐ Standard Battery ☐ Short Battery (Forward Position) ☐ Short Battery (Backward Position)

Rear Under Chassis Stiffener: ☐ None ☐ Graphite ☐ Brass

Damper Setup

	Front	Rear
Spring	2.5-2.8 Axon	2.6-2.9 Axon
Oil	30	30
Rebound		
Piston	4	4
Length	10.2	10.5
Foam Insert	☐	☐
Hole In Cap	☐	☐

Transmission Setup

Front		Rear	
	Spool	Gear Diff	
Oil		Oil	1000
Weight	g	Weight	1.4 g
Position	Low	Position	Low

Others

Servo	Ko	Tires	Rush
Esc	HW G2	Additive	SMJ
Motor	HW 4.5T	Body	Twister
Spur	64 P/ 114 T	Rear Wing	
Pinon	64 P/ 29 T	FDR	7.468