XPRESS EXECUTE XQ10 SET-UP SHEET

Driver	Hay	Track Surface	Outdoor Asphalt			Track Temperture	
Date	22-112020	Track Traction	Medium	Result		Air Temperature	
Track	Trc	Country		Best Lap	15.3	Humidity	
Remark							

Front

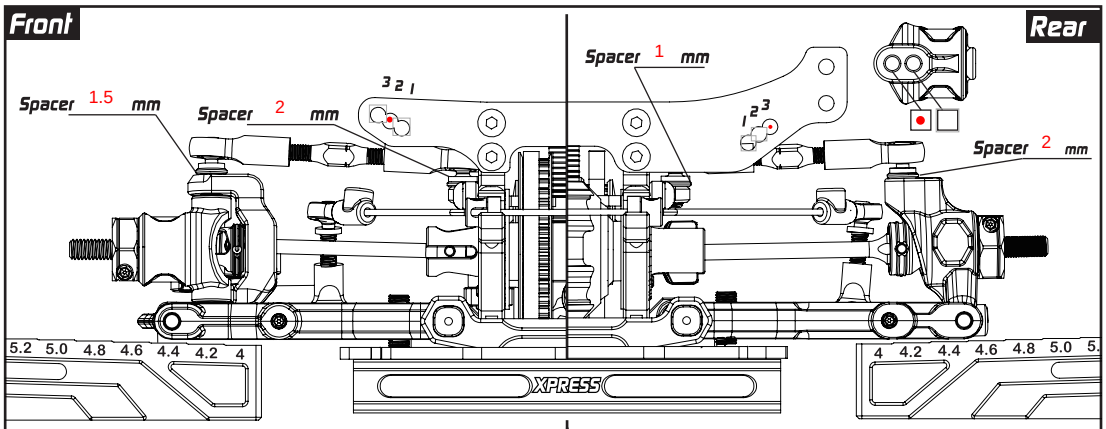

Rear

	Front	Rear
Hex Offset	5 mm	4.5 mm
Camber	2 °	2 °
Ride Height	5 mm	5.2 mm
DownStop	5.4 mm	4.4 mm
Sway Bar	1.3 mm	1.3 mm

Camber Link: ☐ M ☒ H
C-Hub: ☐ M ☒ H
Steering Block: ☐ M ☒ H
Suspension Arm: ☐ M ☒ H
Rear Hub: ☐ M ☒ H
Suspension Arm: ☐ M ☒ H
Camber Link: ☐ ☒

Optional — On-Power Control System

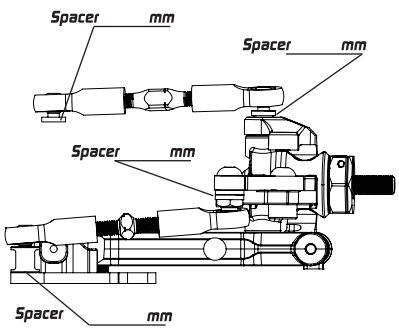

Hex Offset mm
Camber °
Ride Height mm
DownStop mm
Sway Bar 1.2 mm
Steering Block ☐ M ☐ H
Suspension Arm ☐ M ☐ H

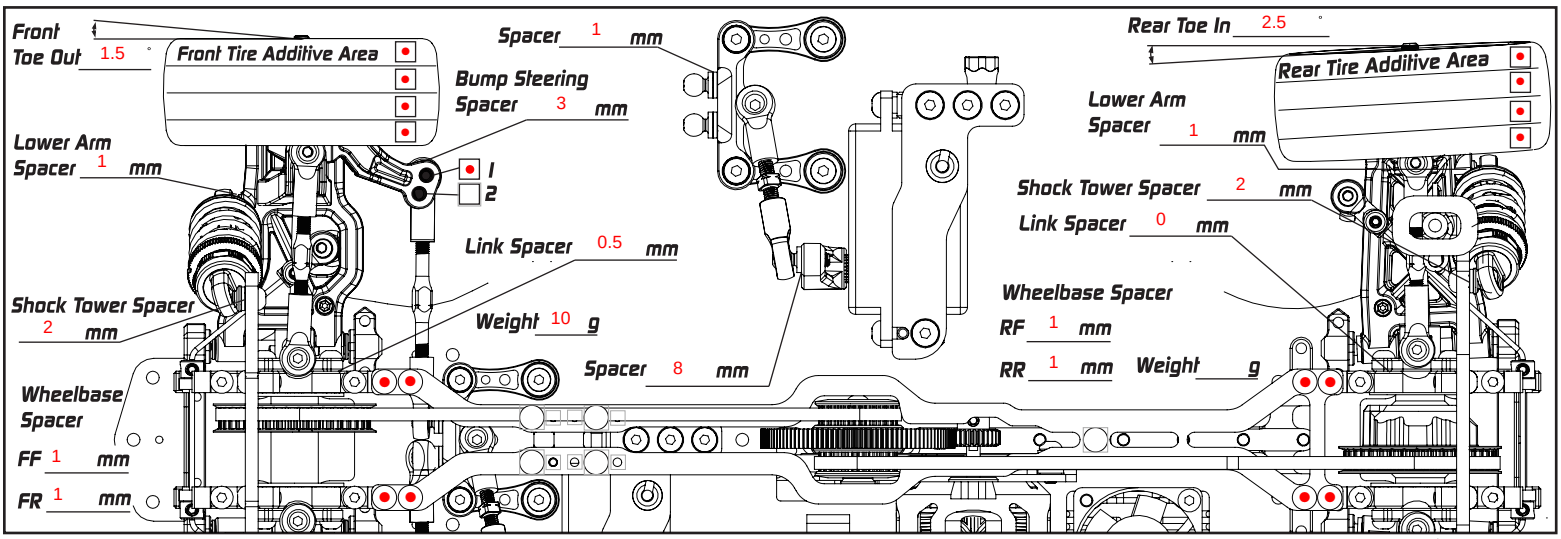

Suspension Mount Setup

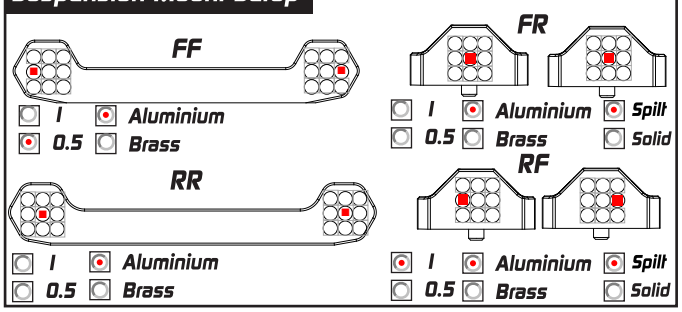

FF: ☐ 1 ☒ Aluminium; ☒ 0.5 ☐ Brass
FR: ☐ 1 ☒ Aluminium ☒ Spilt; ☐ 0.5 ☐ Brass ☐ Solid
RR: ☐ 1 ☒ Aluminium; ☐ 0.5 ☐ Brass
RF: ☒ 1 ☒ Aluminium ☒ Spilt; ☒ 0.5 ☐ Brass ☐ Solid

Flex Control

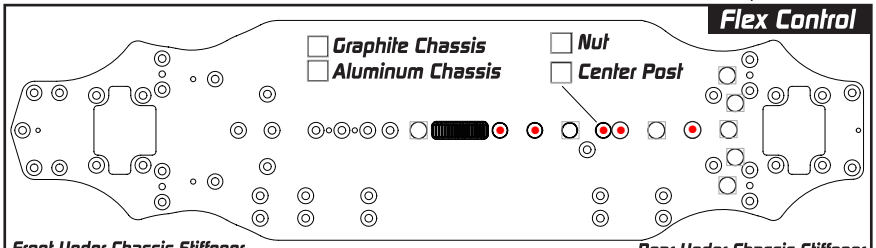

☐ Graphite Chassis
☐ Aluminum Chassis
☐ Nut
☐ Center Post

Front Under Chassis Stiffener: ☐ None ☐ Graphite ☐ Brass

☐ Standard Battery
☐ Short Battery (Forward Position)
☐ Short Battery (Backward Position)

Rear Under Chassis Stiffener: ☐ None ☐ Graphite ☐ Brass

Damper Setup

	Front	Rear
Spring	Axon red	Axon red
Oil	450	450
Rebound	5mm	5mm
Piston	4	4
Length		
Foam Insert	☐	☐
Hole In Cap	☐	☐

Transmission Setup

Front	Rear
Spool	Gear Diff
Oil	Oil 8000
Weight g	Weight 1.1 g
Position High	Position High

Others

Servo		Tires	Matrix
Esc	Dash	Additive	Sp red
Motor	Dash 5T	Body	Xtreme
Spur	64 P/ 110 T	Rear Wing	Std
Pinon	64 P/ 28 T	FDR	.4642