XPRESS EXECUTE XQ10 SET-UP SHEET

Driver	Felix Law	Track Surface	Outdoor	Asphalt		Track Temperture	
Date	12/11/2021	Track Traction	Medium	Result		Air Temperature	
Track	Homestead Raceway	Country	USA	Best Lap	18.1	Humidity	
Remark	X-Square upper Bulkhead used, 0.75 RF block						

Front / Rear

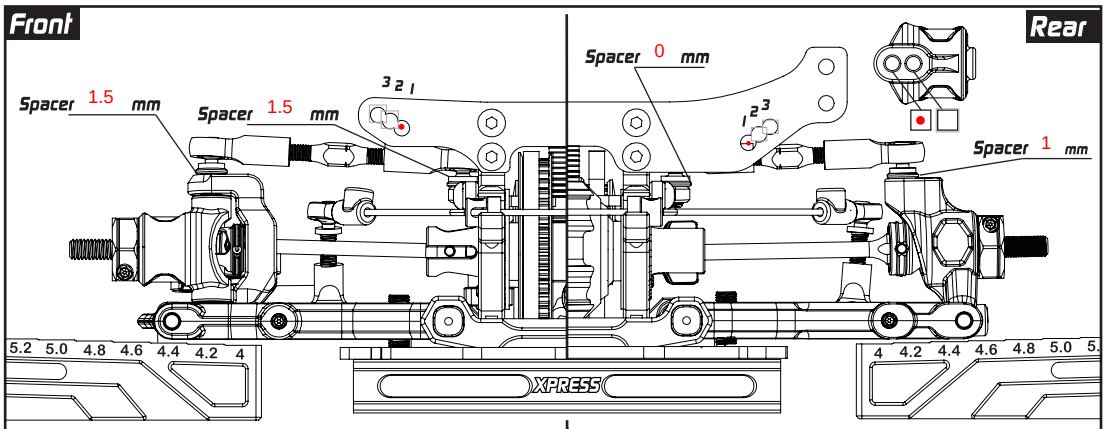

	Front	Rear
Hex Offset	4.5 mm	4.5 mm
Camber	2 °	2 °
Ride Height	5.2 mm	5.6 mm
DownStop	5.8 mm	4.4 mm
Sway Bar	1.3 mm	1.3 mm

Camber Link: ☐ M ☒ H
C-Hub: ☐ M ☒ H
Steering Block: ☐ M ☒ H
Suspension Arm: ☐ M ☒ H
Rear Hub: ☐ M ☒ H
Suspension Arm: ☐ M ☒ H
Camber Link: ☒ / ☐

Optional — On-Power Control System

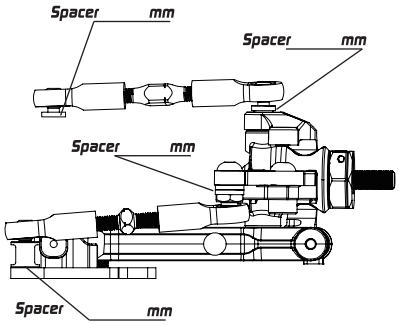

Hex Offset mm
Camber °
Ride Height mm
DownStop mm
Sway Bar 1.2 mm
Steering Block ☐ M ☐ H
Suspension Arm ☐ M ☐ H

Front / Rear

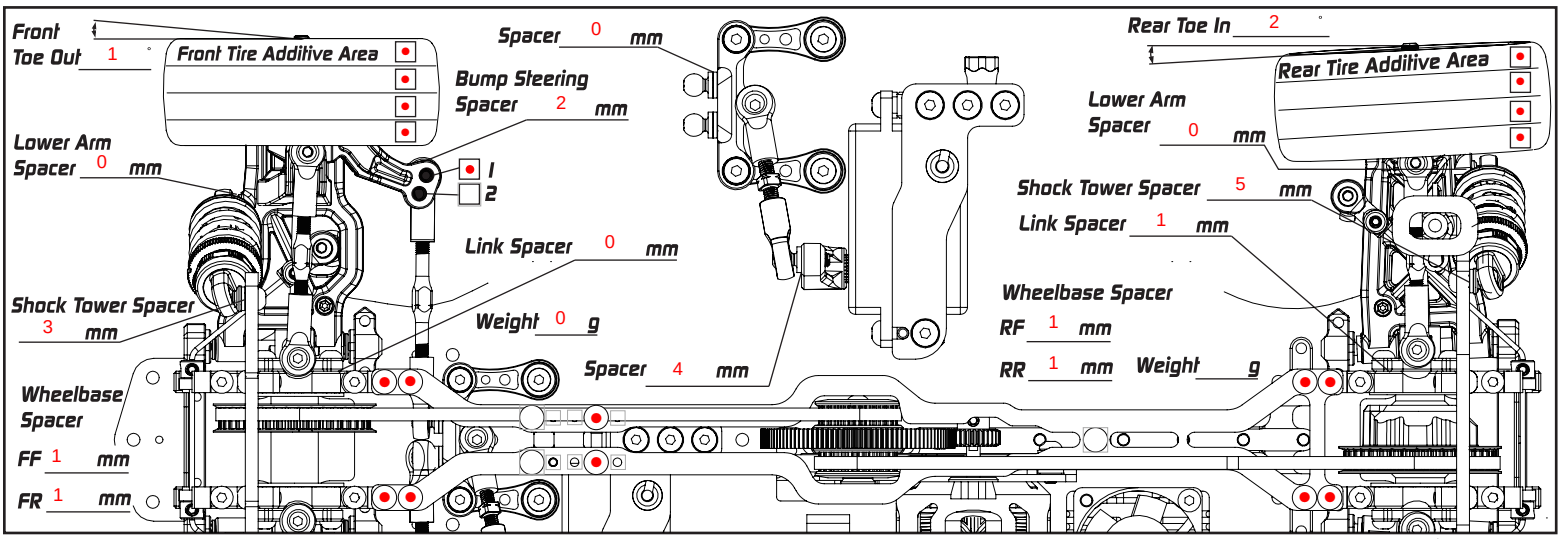

Suspension Mount Setup

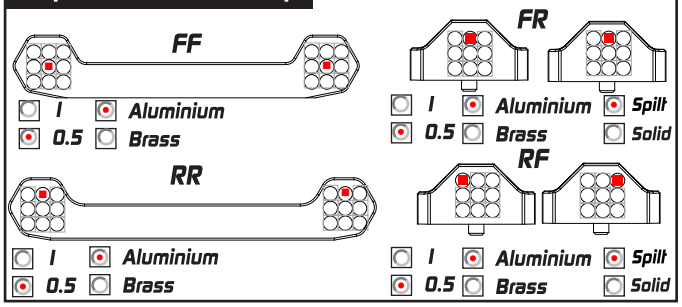

FF: ☐ 1 ☒ Aluminium; ☒ 0.5 ☐ Brass
FR: ☐ 1 ☒ Aluminium ☒ Spilt; ☒ 0.5 ☐ Brass ☐ Solid
RR: ☐ 1 ☒ Aluminium; ☒ 0.5 ☐ Brass
RF: ☐ 1 ☒ Aluminium ☒ Spilt; ☒ 0.5 ☐ Brass ☐ Solid

Flex Control

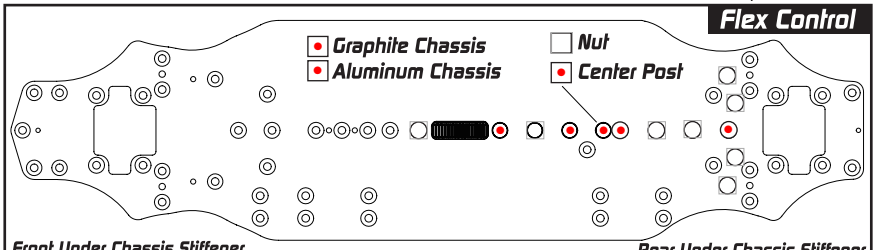

☒ Graphite Chassis
☒ Aluminum Chassis
☐ Nut
☒ Center Post

Front Under Chassis Stiffener
☒ None
☐ Graphite
☐ Brass

☒ Standard Battery
☐ Short Battery (Forward Position)
☐ Short Battery (Backward Position)

Rear Under Chassis Stiffener
☒ None
☐ Graphite
☐ Brass

Damper Setup

	Front	Rear
Spring	Serpent 2.7	Serpent 2.7
Oil	550	550
Rebound	normal	Normal
Piston	4	4
Length	10	10.5
Foam Insert	☐	☐
Hole In Cap	☒	☒

Transmission Setup

	Front	Rear
	Spool	Gear Diff
Oil		8000
Weight	g	1.0 g
Position	High	High

Others

Servo	SSL LH 2	Tires	Hotrace 36
Esc	Maclan	Additive	Yellow V3
Motor	Maclan 4.5	Body	JC A one 2
Spur	64 P/ 110 T	Rear Wing	JC
Pinon	64 P/ 29 T	FDR	7.206